GX600
X-RAY GENERATOR

INSTALLATION INSTRUCTIONS
PG 61:I

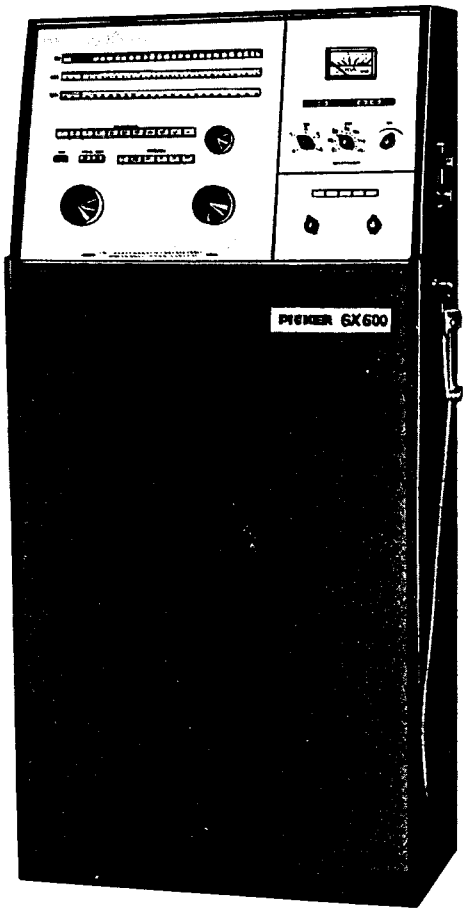

PICKER ROENTGEN GMBH
4992 ESPELKAMP
WEST-GERMANY

Eigentum der Firma PICKER
PROPERTY OF PICKER CORPORATION
April 1972

Printed in Germany

CONTENTS

1 section 1
EQUIPMENT DESCRIPTION

1 general
2 operating
3 specifications

4 section 2
INSTALLATION

4 unpacking
4 mechanical installation
4 wiring information

13 section 3
CHECKOUT AND ADJUSTMENT

13 test equipment
13 preliminary setup
14 preliminary adjustments
14 adjustment of the dual tube limit device
15 checkout of internal rotor starter
16 timer checkout
16 pre-heating of the large focal spot when doing fluoro on the small focal spot only
16 fluoroscopic, standby filament
17 kV compensation
17 space charge compensation
17 mA calibration
18 checkout of the mA stabilizer

19 section 4
PHOTOTIMER

19 general
20 installation
21 adjustment and calibration

25 section 5
REFERENCE DATA

Eigentum der Firma PICKER

RADIATION WARNING

X-Rays and Gamma-Rays are dangerous to both patient and operator unless established safe exposure procedures are strictly observed.

The useful beam can produce serious or fatal bodily injuries to any persons in the surrounding area if used by an unskilled operator. Adequate precautions must always be taken to avoid exposure to the useful beam, as well as to leakage radiation from within the source housing or to scattered radiation resulting from the passage of radiation through matter.

Those authorized to operate, participate in or supervise the operation of the equipment must be thoroughly familiar and comply completely with the currently established safe exposure factors and procedures described in the National Council on Radiation Protection and Measurements (NCRP) "Medical X-Ray and Gamma-Ray Protection for Energies up to 10 Mev — Equipment Design and Use" NCRP Report #33 as revised or replaced in the future.

Those responsible for the planning of X-Ray and Gamma-Ray equipment installations must be thoroughly familiar and comply completely with the structural shielding requirements outlined in NCRP #34 as revised or replaced in the future.

Failure to observe these warnings may cause serious or fatal bodily injuries to the operator, patient or those in attendance.

Section 1

EQUIPMENT DESCRIPTION

1. GENERAL

The GX 600 is a medium capacity three-phase 12pulse X-ray generator designed for all standard radiographic procedures. The generator can operate two double focus X-ray tubes with optional provision for a third.

Its maximum rating is

600 mA at 120 kVp and
300 mA at 150 kVp

1.1. X-RAY CONTROL

The X-ray control is a console-type cabinet which permits against-the-wall installation. The front cover panel is removable to faciliate maintenance and service. The control panel is hinged and pivots downward to permit service access. This angled panel presents the operator controls at a convenient height for selection and monitoring. Functional controls are arranged in three groups: Radiography, Fluoroscopy, and Phototiming.

The control contains the line connection, the motor driven Variac for Rad and Fluoro kV, the PCBs, all calibration potentiometers and resistors, and the terminals for the interconnection.

1.2. POWER MODULE

The Power Module contains the power contactors and the SCR drive circuit to switch the high tension primary circuit. The GX 600 employs SCR contactors. Furthermore it contains the fluoroscopic contactor and the power components for the falling load phototimer system, if included.

1.3. HIGH TENSION TRANSFORMER UNIT

The High Tension Transformer Unit contains the High Tension Transformer, the selenium rectifier bridges, the X-ray tube filament transformers, and the motor-driven high tension switch for selection of the X-ray tubes.

1.4. PHOTOTIMER (Optional)

The GX 600 is prepared to work with a Phototimer. The GX 600 can be equipped with a Phototimer in the field.

The Phototimer is arranged to drive four different Pickups. The Pickups can be connected by means of plugs (Amphenol Series 91) inside the control. So all presently existing Pickups which are provided with this plug can be used.

The shortest exposure time with Phototimer is 2 milliseconds.

Two types of Phototimer are available:

Type a) NONE FALLING LOAD SYSTEM

The Computer in the None Falling Load Phototimer calculates the maximum allowable mA according to the rating of the focal spot, the kV setting and the Backup Time.

This mA value becomes automatically selected by a motor driven mA Selector and is kept constant during the exposure.

The Phototimer determines the length of the exposure during radiation and terminates it after the correct film density is reached. An excessive load is prevented by the Backup Timer. Depending on the position of the Density Switch the Backup Time will be as follows:

Step 1: 0,1 sec
Step 2 - 5: 0,6 sec
Step 6: 2 sec

These times always have to be chosen so that there is enough space between the real exposure time and the Backup Time.

The necessary margin between Backup Time and exposure time reduces the effective use of the tube rating. Therefore the none falling load system can be recommended in conjunction with powerful focal spots only.

Type b) FALLING LOAD SYSTEM

Falling load means that during an exposure the mA becomes reduced according to the tube rating while the kV are controlled to a constant value. In such a system any exposure time corresponds to the maximal allowed load. Thus takes full advantage of the capacity of a focal spot. Independent of the exposure time the tube cannot be overloaded.

So the Falling Load Phototimer is intended to drive medium power focal spots.

The mA reduction in the GX 600 Phototimer is made in steps. The first step follows after an exposure time t1 of 0,3 sec or 0,5 sec resp. the second step after 1 sec. The final termination (Backup Time) is fixed to 3 sec.

The Computer calculates and selects the max. mA step for the first time region. By means of the Programming Leads the appropriate mA steps for the second and the third time region are then determined.

Eigentum der Firma PICKER

1.5. OPERATING

1.5.1. INDICATOR LAMPS

On the control panel seven Indicator Lamps are arranged.

CONTROL READY (green)

This lamp goes on when the generator is ready for operation.

NOT READY (yellow)

This lamp goes on when:

a) the mA Selector motor is running or stops in a wrong position
b) the HT Tube Selector motor is running or stops in a wrong position
c) no mA pushbutton is depressed (mA motor stops at the limit switch)
d) PT ON and no Pickup programmed for selected technique position
e) on high speed mode during the hangover time or brake time the Technique Selector position is changed to another X-ray tube.
f) the Technique Selector is set to a position where no X-ray tube is connected.

TUBE LIMIT (red)

This lamp goes on when:

a) the chosen kV exceeds kV limit of X-ray tube
b) the chosen mA, kV-and exposure time exceed permissible X-ray tube load.

2

CIRCUIT BREAKER (red)

This lamp goes on indicating the following:

a) Timer does not work properly
b) excess mA during exposure
c) fault in HT circuitry (transformer, cables, tube)
d) fault of the SCRs
e) no X-ray tube filament current
f) the Technique Selector is set to a position where no X-ray tube is connected (no fil.current)

This lamp goes out when the generator is switched OFF, then ON, except on conditions item "e" and "f". In these cases select the proper technique or check the filament circuit.

NOTE:

During the selection time of the HT Tube Selector the filament circuit will be temporarily interrupted. The lamp indicates this.

HIGH SPEED (white)

This lamp goes on to indicate high speed rotor drive has been selected. Refer also to 1.5.8. Anode Speed Selector.

BACKUP (white)

This lamp goes on to indicate that a phototimed exposure is terminated by the Backup Timer (underexposed)

The lamp goes out during the following exposure or if the generator is switched OFF, then ON.

X-RAY ON (red)

This lamp goes on while exposure is in progress. (Fluoro and Rad)
It indicates always the exposure time plus an additional time of 0,1 sec.

1.5.2. CONTROL mA METER

The mA Meter reads the Fluoro mA directly.

During Radiographic exposures the pointer deflects to the black marking to indicate that the selected mA value has been achieved.

On short exposure times the pointer is not able to reach the marking (times less than 0,4 sec)

On technique MAMMO the meter indicates the selected kV (20 - 35 kV) prior to an exposure.

During the exposure it indicates mA.

1.5.3. ON - OFF

The ON - OFF Pushbutton controls the power to the generator.

When the Rapid Accelleration Rotor Drive is connected and the generator is switched OFF, it will still be ON (one single phase only) until the rotor brake is finished.

1.5.4. TECHNIQUE SELECTOR

This selector (6 steps) selects the technique (mode) and corresponding to the programming done during the installation it also selects the X-ray tube and PT Pickup.

On technique MAMMO the mA Pushbuttons are disabled. The mA are automatically selected by the FOCAL SPOT Pushbuttons.
Small focal spot 150 mA, large focal spot 300 mA.

1.5.5. kV SELECTOR

The motor driven Variac is remotely controlled by the kV Knob for Rad kV and Fluoro kV resp.

The Variac reacts on the setting of the Rad kV Selector on all techniques except on FLUORO SF.

On FLUORO SF the Variac sets Fluoroscopic kV. The Radiographic kV becomes set during the Pre Spot periode.
The Variac corrects line fluctuation and kV regulation due to mA settings.

1.5.6. mA PUSHBUTTONS

Eleven pushbuttons provide mA selection on either large or small focal spot on either X-ray tube.

The motor driven mA Selector sets mA and operates the mAs computing drum (mAs Scale).

1.5.7. mAs - sec SELECTOR

This knob selects the Radiographic exposure time as well as the mAs value according to the selected mA.

1.5.8. ANODE SPEED SELECTOR

This selector, used in conjunction with the optional high speed drive is mounted at the side of the control. It permits selection of normal speed "N" (3000 rpm), AUTOMATIC, or high speed "H" (9000 rpm).

When the selector is in AUTOMATIC position the Dual Tube Limit Device automatically switches anode speed from 3000 to 9000 rpm and back again as required to avoid X-ray tube overload.

Eigentum der Firma PICKER
PROPERTY OF PICKER CORPORATION
April 1972

1.5.9. PT ON - OFF

This pushbutton activates the Phototimer and switches off the illumination of the mAs Scale, the sec Scale and the mA Pushbuttons.

The mA Pushbuttons are disabled and the mA becomes automatically selected by the Computer presumed the Tube Limit Device is calibrated.

The mA selection changes by kV variation.

You can read the selected mA at the mAs Scale above the 1 sec position of the time Scale.

1.5.10. DENSITY SELECTOR

The six density position are to select the proper film density for Chest, Thorax, Abdomen, Skull, GI, and Spine.
Each position corresponds to a density potentiometer on PCB 16.

1.5.11. DENSITY CORRECTION

This switch allows the density to be varied in steps up to ± 50 % deviation of the normal density setting N.

1.5.12. BACKUP mAs

This pushbutton disables the falling load and activates the mAs Selector which now works as a Backup Time selector.

This requires to select kV and maximum needed mAs for a phototimed exposure.

---

2. SPECIFICATIONS

2.1. POWER REQUIREMENTS

90 kVA, 3 phase 380 VAC (344 - 438 V)

2.2. LINE FREQUENCY

50 Hz resp. 60 Hz (must be stated in the order)

2.3. Recommended distribution transformer - 75 kVA

2.4. ATTENTION

Line Matching Transformer at 208 V, 240 V, 440 V, 480 V lines

max. line resistance at 380 V - 0,3 OHM
208 V - 0,05 OHM
240 V - 0,06 OHM
440-480 V - 0,2 OHM

2.5. At a higher line resistance the max. output is reduced. In this case contact CMED.

NOTE:

All interconnection are to be made using conduit leads.

2.6. DISCONNECT SWITCH RATING

380 and 480 V, 3-phase, 60 Hz line, 100 Amp. capacity, fused for 100 Amp.

0 V, 3-phase, 60 Hz line, 150 Amp. capacity, fused for 125 Amp.

2.7. WIRE SIZES FOR 3-PHASE LINE

2.7.1. Incomming line to disconnect switch and Line Matching Transformer (up to 100 foot run)

380 and 480 V line 3 x No 3; 2 x No 8 wires
240 V line 3 x No 0; 2 x No 6 wires

2.7.2. DISCONNECT SWITCH TO CONTROL

(up to 15 foot run)

380 and 480 V line 3 x No 4; 2 x No 8 wires
240 V line 3 x No 1; 2 x No 6 wires

2.7.3. CONTROL TO POWER MODULE

(up to 50 foot run)

3 x No 3; 2 x No 8 wires

2.7.4. Power Module and HT Transformer shall be installed adjacent to each other.

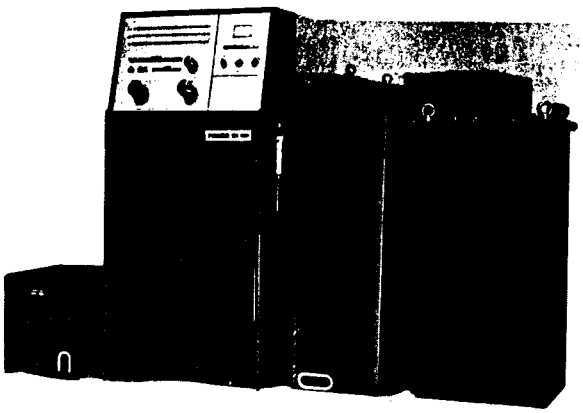

SECTION 2

INSTALLATION

3. UNPACKING

After uncrating the components of the X-ray Generator, visually inspect the equipment for any signs of "hidden damage" which may have been incurred during shipment and which may not have been visible from the outside of the shipping containers. If any such damage is found, immediately file a claim with the carrier.

4. MECHANICAL INSTALLATION

Physically locate and mechanically install the components. Check that the oil level in the High Tension Transformer is 15 mm (9/16") below the tank cover.

The Power Module and the High Tension Transformer are designed to be installed side by side and to be connected by the attached cables.

5. WIRING INFORMATION

These following sheets have been prepared to provide the installer with the information required to make the interconnections between the components of the X-ray generator and to connect the usual auxiliary equipment.

NOTE:

In this generator the leads for DC ground (OV DC) and AC ground (OV AC) are separately run. This is absolutely necessary for protection and acceptable function of the printed circuit boards.

5.1. If ground leads carrying alternating current are connected to the generator, the terminals specified for AC ground must be used.

If ground leads carrying direct current are connected to the generator, the terminals specified for DC ground must be used.

These are:

	CONTROL	POWER MODULE	HT TRANSF.
OV AC	6/18	21/15 21/16	SC,OV
OV DC	3/19 8/1 to 8/10	———	EE

NOTE:

The internal + 24 V and - 24 V DC supply is for internal use only.

Auxiliary devices must derive their power from other sources.

5.2. TRIGGER SWITCH

The Trigger Switch for Radiographic exposures is to be connected to the control according to the following table:

	GX 600 TERM.	TRIGGER SWITCH
Ground	⏚	G
Pre Rad	5/3	C1
OV return	8/1	CC1
Rad	5/4	C2
OV return	8/1	CC2
-	-	I
-	-	I

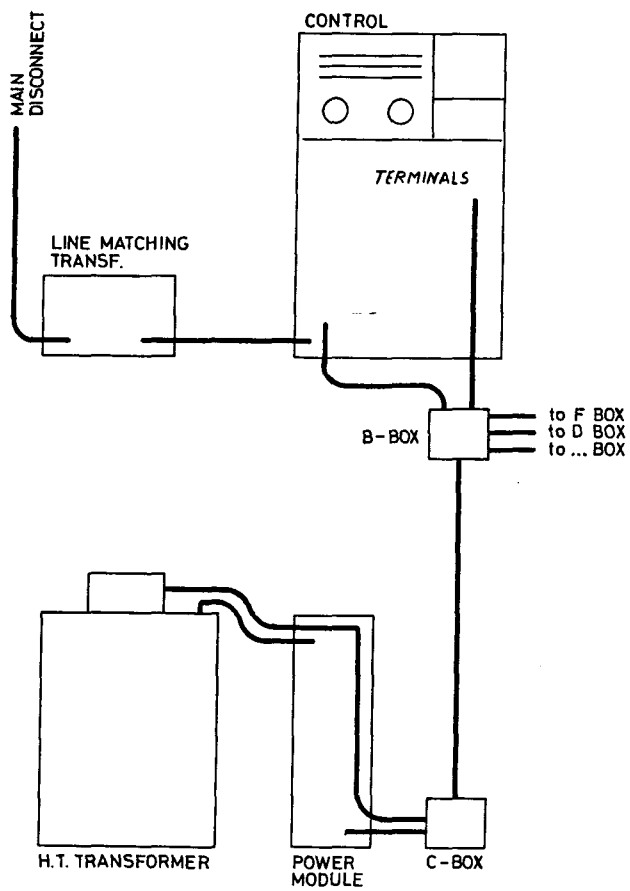

Eigentum der Firma PICKER
PROPERTY OF PICKER CORPORATION
April 1972

5.3. GX 600 GENERATOR POWER MODULE WIRING INFORMATION

CHECK	ITEM	CONDUIT WIRE GAUGE	CONDUIT WIRE IDENTIFICATION	CONTROL TERM.			POWER MODULE TERM.	H.T. TRANSF. TERM.	REMARKS	CIRCUIT FUNCTION
						GENERATOR LINE SUPPLY				
	1			FO1						380 VAC - Phase R
	2			FO2						380 VAC - Phase S
	3			FO3						380 VAC - Phase T
	4			MP						Wye Connection Neut.
	5			⏚						Grounding Conductor
						INTERCONNECTION WIRING				
	6	refer Section 1: Specifications		11			RES 02 A			H.T. Prim.
	7			21			RES 02 B			H.T. Prim.
	8			31			RES 02 C			H.T. Prim.
	9						P11	P11		H.T. Prim.
	10						P21	P21		H.T. Prim.
	11						P31	P31		H.T. Prim.
	12						P12	P12		H.T. Prim.
	13						P22	P22		H.T. Prim.
	14						P32	P32		H.T. Prim.
	15			MP			MP			Wye Connection Neut.
	16			⏚			⏚	⏚		Grounding Conductor
	17	18		3/8				X		X-Ray Fil. Comm.
	18	18		3/6				XS		X-Ray Fil. Small
	19	18		3/7				XL		X-Ray Fil. Large
	20	18		1/1			21/14	M1		mA Meter Circuit
	21	18		1/1			21/20	M2		mA Meter Circuit
	22	18		6/18			21/15	SC,OV		O-Volt Return for AC Volts
	23	18		3/1				SU		U.T.H.T. Switch
	24	18		3/2				SO		O.T.H.T. Switch
	25	18		3/3				SA	3rd TUBE	A.T.H.T. Switch
	26	16		7/1				H7		Stator - In
	27	16		7/2				U8		U.T. Stator - Capacitor
	28	16		7/6				U9		U.T. Stator Comm.
	29	16		7/3				O8		O.T. Stator - Capacitor
	30	16		7/7				O9		O.T. Stator Comm.
	31	16		7/4				A8	3rd TUBE	A.T. Stator - Capacitor
	32	16		7/8				A9	3rd TUBE	A.T. Stator Comm.
	33	18		1/4				EL1		U.T. Selection Safety
	34	18		1/5				EL2		O.T. Selection Safety
	35	18		1/6				EL3	3rd TUBE	A.T. Selection Safety
	36	18		3/19				EE		Selection Safety Comm.
	37	18		3/18			21/10			FLUORO SIGNAL
	38	18		3/10			21/1	220 V		220 V AC Supply
	39	18		6/10			21/11			132 V AC Supply
	40	18		3/11			21/2			Safety Contactor RES 02
	41	18		3/14			21/5			Falling Load RES 710
	42	18		3/15			21/6			Falling Load RES 711
	43	18		3/16			21/7			Falling Load RES 712
	44	18		3/17			21/8			Falling Load RES 713
	45	16		3/20			21/12			Fluoro. Prim. Circuit
	46	18		3/12			21/3			Fluoro. Contactor RES 17
	47	18		3/13			21/4			Fluoro. Contactor RES 18
	48	18		2/5			21/19			RE 81, Shunt for LO2
				Plug			Plug			
	49			41 A			48 A			Not used
	50			41 B	Shielded		48 B			+ 24 V
	51			41 C	Control		48 C			OV
	52			41 D			48 D			Shield
	53			41 E	Cable		48 E			Stop Pulse
	54			41 F			48 F			Start Pulse

5

5.4 CAT. 6265, 6267 SERIES 15° 90° GALAXY TABLES WIRING INFORMATION—WITH THREE-PHASE GENERATORS

NOTE: Before power is applied to the control or the table, remove the jumper wires between A6 and E4, A6 and F2, E5 and E6. These jumper wires are on the plugs coming from the 1714 spotfilmer.

CHECK	ITEM	CONDUIT WIRE GAUGE	CONDUIT WIRE IDENTIFICATION	ORIGIN TERMINAL GX 600 CONTROL	ORIGIN TERMINAL	ORIGIN TERMINAL	CONDUIT RUN BETWEEN BOXES	JUNCTION BOX TERMINAL	TABLE FINAL TERMINAL	REMARKS	CIRCUIT FUNCTION	NEMA CODE
☐	1	12					D-LC		S1	120V Auxiliary	120V Supply	A1
☐	2	12					D-LC		S2	Supply	120V Supply	A2
☐	3	18		Jumper WU1 to S1 in Table Base					WU1	Optional	U.T. Blower	WU1
☐	4	18		Jumper WU2 to S2 in Table Base					WU2	Optional	U.T. Blower	WU2
☐	5	18		Anode Heat Indicator at Control					TS SW1	Optional	Anode Heat Sensor	---
☐	6	18		Anode Heat Indicator at Control					TS SW2	Optional	Anode Heat Sensor	---
☐	7	18		~~6/10~~ 6/12			B-D		BM		120 Volts AC	BM
☐	8	18		1/9			B-D		BC	See Wiring Note 1a	Bucky Drive	BC
☐	9	18		8/1			B-D		†BE		Bucky Contacts	BE
☐	10	18		2/11			B-D		BL	See Wiring Note 1b	Bucky Contacts	BL
☐	11	18		~~6/12~~ 6/13			B-D		BR		120 Volts Common	BR
☐	12											BA
☐	13	12		⏚					G		Grounding Conductor	G
☐	14	14		3/5			B to room lighting circuit		YL	See Room Light circuit	Room Light Control	YL
☐	15	14		4/11					YE		Room Light Control	YE
☐	16			---					PK1	not used	Park	---
☐	17	18		5/1			B-D		FE	Splice to foot-switch cable (contacts)	Footswitch	FE
☐	18			---					FL		Footswitch	FL
☐	19	18		Jumper FL to SS2 in Table Base					SS2			---
☐	20	18		8/1			B-D		†SS1			---
☐	21	18		8/1			B-D		†XP1			---
☐	22	18		2/10			B-D		XP2		Forward	---
☐	23	18		5/2			B-D		XS1		Exposure Advance	---
☐	24	18		8/1			B-D		†XS2			---
☐	25	18		---			B-D		RL	not used	R.F. Switch	RL
☐	26	18		Jumper AR2 to S1 in Table Base					AR2			
☐	27	18		Jumper AUX1 to S2 in Table Base					AUX1			
☐	28	18		4/9			B-D		AUX1			
☐	29	18		3/4			B-D		AR1			
				TUBE STATOR WIRING FROM H.T. TRANSFORMER								
				H.T. TRANS. TERMINAL								
☐	30	16		*H7			C-D		U7	Black	Stator-In Phase	U7
☐	31	16		*U8			C-D		U8	Green	Stator-Capacitor	U8
☐	32	16		*U9			C-D		U9	White	Stator-Common	U9

WIRING NOTES:

*Use #16 shielded leads for wiring to RA tube stator terminals U7, U8, U9 when 3753 high speed rotor control is used. The shields should be grounded to one end only.

☐ 1a For Technique 2 connect BC to Control term 1/9, for Techn. 3 to term 1/10, for Techn. 4 to term 1/11

☐ 1b For Technique 2 connect BL to Control term 2/11, for Techn. 3 to term 2/12, for Techn. 4 to term 2/13

☐ 2a. Check that: The leads 78H to 82H have been inserted into their respective connectors at the rear of tower to extend to terminals XS1, XS2, AR1, AR2, PK1 to the base, and

☐ 2b. Check that lead AUX1 (64H) has been connected to F2.

☐ 3. Control terminals 8/1.... 8/10 are signal ground. (0 Volts return)

☐ †4. Connect BE, SS1, XP1, XS2 together at the table D box and run a single lead to control terminal 8/1....8/10 (0V DC)

Eigentum der Firma PICKER
PROPERTY OF PICKER CORPORATION
April 1972

CAT. 6267 SERIES 90° GALAXY AND 6265 SERIES 15° GALAXY TABLES BASIC WIRING DETAILS FOR THREE PHASE

LEGEND
BL TABLE CABLES LEAD MARKING
--- NOT DIRECT CORRECTION

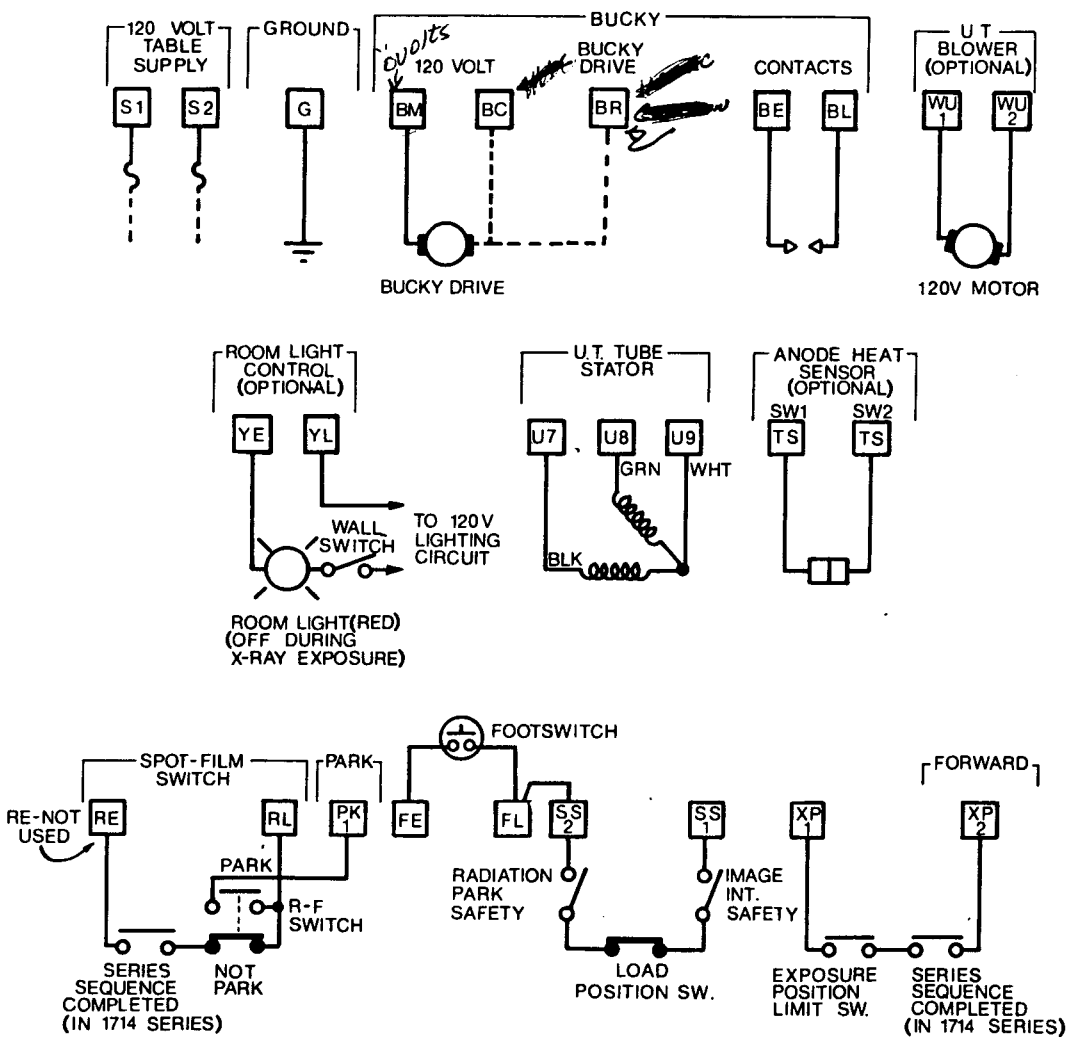

Eigentum der Firma PICKER
PROPERTY OF PICKER CORPORATION
April 1972

5.5 CAT. 6242 SERIES CEILING TUBEMOUNT WIRING INFORMATION

CHECK	ITEM	CONDUIT WIRE GAUGE	CONDUIT WIRE IDENTIFICATION	ORIGIN TERMINAL GX 600 CONTROL TERMINAL	CONDUIT RUN BETWEEN BOXES	JUNCTION BOX TERMINAL	C T M FINAL TERMINAL	REMARKS	CIRCUIT FUNCTION	NEMA CODE
☐	1	14		120-VOLT FUSED AUXILIARY SUPPLY	F-LC Load Center		A1		120-Volt Supply	A1
☐	2	14		120-VOLT FUSED AUXILIARY SUPPLY	F-LC Load Center		A2		120-Volt Supply	A2
☐	3	18		ANODE HEAT INDICATOR	B-F		S1	Optional	Anode Heat Sensor	--
☐	4	18		ANODE HEAT INDICATOR	B-F		S2	Optional	Anode Heat Sensor	--
☐	5	18		** Trig.Sw. J	B-F		JV1	Optional	Stereoshift-P.B.	JV1
☐	6	18		Trig.Sw. J	B-F		JV2	Optional	Stereoshift-P.B.	JV2
☐	7	18		JUMPER A1 TO JC IN C.T.M.	---		JC	Optional	Stereoshift-120 V	JC
☐	8	18		JUMPER A2 TO JV2 IN C.T.M.	---		JV2	Optional	Stereoshift-120 V	JV2
☐	9	18		JUMPER A1 TO WO1 IN C.T.M.	---		WO1	Optional	O.T. Blower	WO1
☐	10	18		JUMPER A2 TO WO2 IN C.T.M.	---		WO2	Optional	O.T. Blower	WO2
☐	11	14		⏚	B-F		G	---	Grounding Conductor	G
				TUBE STATOR WIRING FROM H.T. TRANSFORMER DIRECT TO CEILING TUBEMOUNT OR VIA THE "B" BOX						
				H.T. TRANS. TERMINAL						
☐	12	16		*H7	C-F		07	Black	Stator-In Phase	07
☐	13	16		*08	C-F		08	Green	Stator-Capacitor	08
☐	14	16		*09	C-F		09	White	Stator-Common	09
				WIRING FOR ILLUMINATED CEILING STRUCTURE						
☐	15	14			Light Wiring to F1		Black Wire	See Ceil. Structure Wiring	Ceiling Illumination	
☐	16	14			Light Wiring to F1		White Wire	See Ceil. Structure Wiring	Ceiling Illumination	

WIRING NOTES

*Use #16 shielded leads for wiring to R.A. tube stator terminals 07, 08, 09 when high speed rotor drive is installed. The shields should be grounded at one end only.

**Check that stereo button (J) leads of trigger switch are disconnected from control.

Eigentum der Firma PICKER
PROPERTY OF PICKER CORPORATION
April 1972

CAT. 6242 CEILING TUBEMOUNT WIRING DETAILS

TERMINAL LEGEND

A1 C.T.M. CABLE LEAD MARKING

1 TERMINALS IN CEILING CARRIAGE

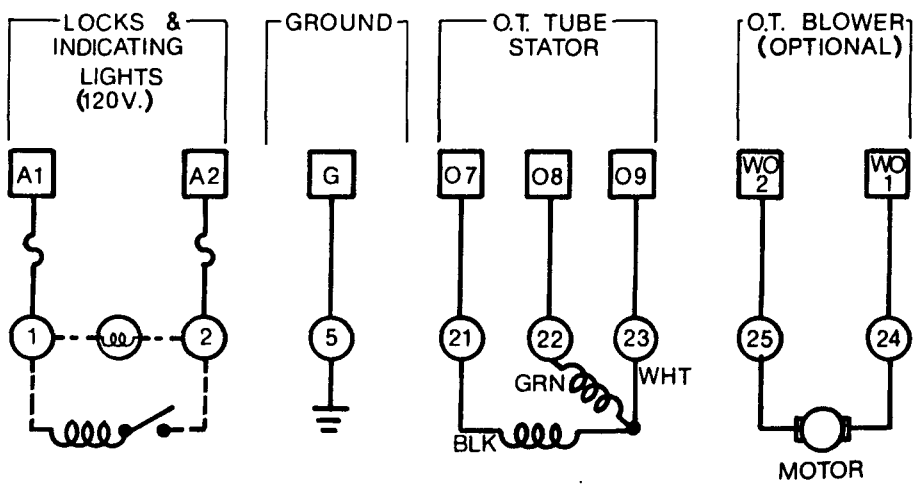

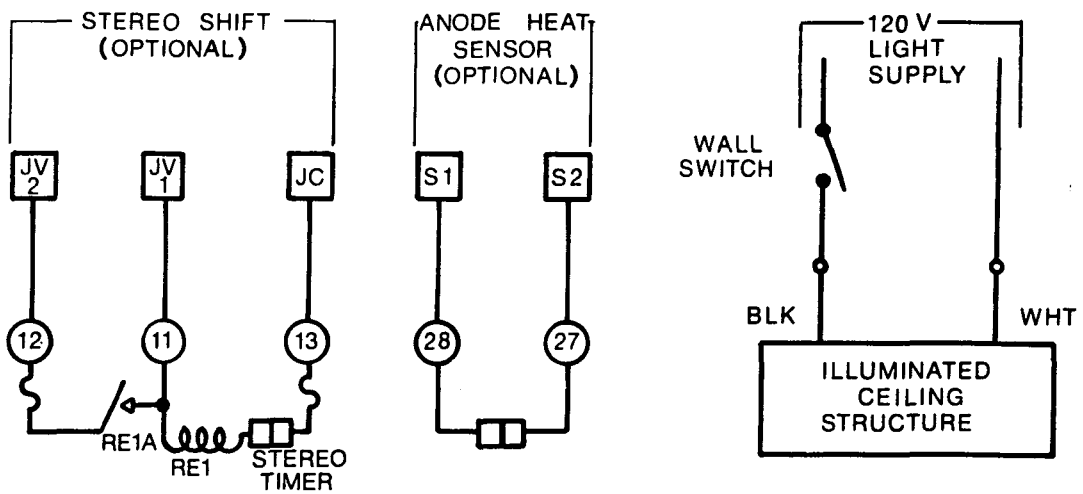

Eigentum der Firma PICKER
PROPERTY OF PICKER CORPORATION
April 1972

5.6. CAT. 3791 SOLID STATE RAPID ACCELERATION HIGH SPEED ROTOR DRIVE

WIRING INFORMATION - WITH GX 600 GENERATOR

CHECK	ITEM	CONDUIT WIRE GAUGE	CONDUIT WIRE IDENTIFICATION		CONDUIT RUN BETWEEN BOXES					GX 600		REMARKS	CIRCUIT FUNCTION	NEMA CODE
☑	1	10		TB1-1	LC-HS							240 Volt 1¢ fused	240V Supply	
☑	2	10		TB1-2	LC-HS							auxiliary supply	240V Supply	
☐	3			TB1-3								not used	H.T. Trans. Switch inhibit	
☐	4			TB1-4								not used	H.T. Trans. Switch inhibit	
☑	5	18		TB1-5	HS-B					6/18			Control on - Common	
☑	6	18		TB1-6	HS-B					5/20			Control on - 120V.	
☑	7	*16		TB1-7	HS-B					7/13		See Note 1	Stator- Common	H9
☑	8	*16		TB1-8	HS-B					7/5		See Note 1	Stator-Capacitor	H8
☑	9	*16		TB1-9	HS-B					7/1		See Note 1	Stator-in Phase	H7
☑	10	18		TB1-10	HS-B					8/1		0V DC return	Rotor inhibit 1	
☑	11	18		TB1-11	HS-B					6/1			Rotor inhibit 1	
☐	12			TB1-12						---		not used	Rotor inhibit 2	
☐	13			TB1-13						---		not used	Rotor inhibit 2	
☑	14	18		TB1-14	HS-B					6/11			Anode rotation	
☑	15	18		TB1-15	HS-B					5/13			Anode rotation	
☑	16	18		TB2-17	HS-B					2/16			180 Hz Start	
☑	17	18		TB2-18	HS-B					2/17			Rotor Start	
☐	18			TB2-19						---		not used	Cine	
☑	19	18		TB2-20	HS-B					2/19			Rotor Switch	
☐	20	18		TB2-21	HS-B					1/15		NOT USED	U.T. Tube	
☑	21	18		TB2-22						1/16			O.T. Tube	
☐	22	18		TB2-23						1/17		NOT USED	Auxiliary Tube	
☐	23	18		TB2-29	HS-B					1/14			Stator Supply Ref.	
☐	24	10		TB2-30	HS-B or B1					⏚			Ground	G

+1. The three stator leads must be run from the rotor drive to the H.T. transformer or the generator using No. 16 shielded wires with the shields grounded at one end only.

Inside the GX 600 Generator

Remove jumper 7/9 to 7/5
Remove jumper 7/13 to 7/14

Disconnect internal lead from 7/1 and tape it.

Jumper 5/14 to 6/18
5/16 to 5/17
5/18 to 6/10
2/9 to 2/8
2/6 to 2/7

For Anode Rotation during Fluoro jumper 2/17 to 2/18 and remove jumper "3" on PCB2.
For 180 Hz Rotation during Fluoro jumper 2/17 to 2/18 and jumper jumper "3" on PCB2.
Remove jumper "HS" on the Tube Board if the tube is a High Speed Tube. PCB8 for Tube I, PCB9 for Tube II, PCB10 for Tube III.

Jumper 5/3 to 2/19 for immediately brake if the trigger switch is released.

Refer to the Manual of the 3791

Eigentum der Firma PICKER
PROPERTY OF PICKER CORPORATION
April 1972

5.7. CASSETTE OR FILM CHANGER WIRING INFORMATION WITH GX 600 GENERATOR

NOTE:

Technique position 5 FILM CHANGER is prepared for rapid sequence exposures series up to 12 exposures/second.

5.7.1. Exposure started by a NC contact (420 CP)

GX 600 Control Term.	420 CP Term.	Function
2/3	14	110 V AC on Technique 5
1/12	21	110 V AC when anode up to speed (Bucky Drive)
5/3	18	closes for rotor start
8/1	20	OV DC return
6/5	9	opens for exposure
8/1	12	OV DC return
4/16	24	positive at the end of exposure
6/18	11 13	OV AC return

Inside the GX 600 Control jumper:

Term. 2/14 and Term. 8/1 (Bucky Contact)
Term. 4/15 and Term. 4/12

11

5.7.2. Exposure started by a NO contact (Schoenander)

GX 600 Control Term.		Function
2/3		110 V AC on Technique 5
1/12		110 V AC when anode up to speed (Bucky Drive)
5/3		closes for rotor start
8/1		OV DC return
4/15		closes for exposure start
4/12		OV DC return
19a20		+ 24 V DC during exposure
6/18		OV AC return
4/16		positive at the end of exposure

Inside the GX 600 Control:

Jumper Term. 2/14 and Term. 8/1 (Bucky Contact)
move jumper from Term. 4/15 and Term. 4/12

Eigentum der Firma PICKER

5.8. LINE MATCHING TRANSFORMER WIRING INFORMATION

NOTE:

At all lines where the nominal voltage differs from 380 V, the Line Matching Transformer must be connected between the main disconnect switch and the GX 600 control. In order to transform the line voltage to 380 V connect the Line Matching Transformer according to the following sketch:

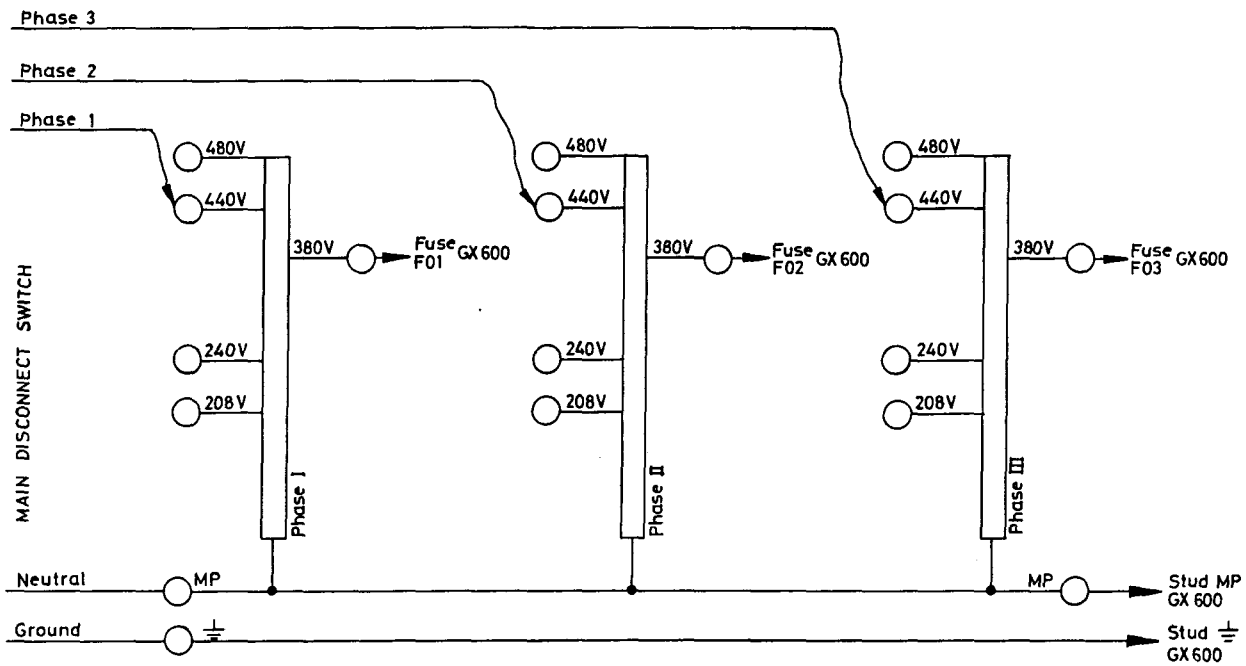

This sketch shows the connection to a 440 V line. For a 480, 240 or 208 Volt line connect it to the corresponding terminals.

NOTE:

The Neutral connection (MP) between Line Matching Transformer and GX 600 Control must be made even if the Line supplies no Neutral.

Section 3

CHECKOUT AND ADJUSTMENT

6.1. TEST EQUIPMENT

The following test equipment is required to calibrate the generator:

6.1.1. AC voltmeter 0-150-300 Volt ranges (± 2 % accuracy)

6.1.2. mAs meter (max. inherent resistance 25 OHM)

6.1.3. VOM

6.1.4. Oscilloscope (storage type prefered)

6.2. PRELIMINARY SETUP

Before connecting power to the system, but after all interconnections are made, check and do the following setup.

6.2.1. Check that all connections are made properly, that all units are grounded, and that all grounds are tied together.

6.2.2. Check all internal plugs for proper seat.

6.2.3. At the HT Transformer remove the marked screw from the vent hole.

6.2.4. Disconnect leads 21/2 and 21/3 in the Power Module.
(No high tension can be switched on now)

6.2.5. Jumper X with XS and XL at H.T. Transformer (No filament of X-ray tube)

6.2.6. Turn all potentiometers on PCB8, PCB9, and if existing on PCB10 fully counterclockwise (Lowest tube filament current)

6.2.7. Turn all potentiometers on PCB13 fully clockwise (max. Tube Limit Device settings)

6.2.8. On PCB30 program the X-ray tubes to the corresponding Technique Selector positions.

EXAMPLE: Fig. 6.2.8. Programmer PCB30

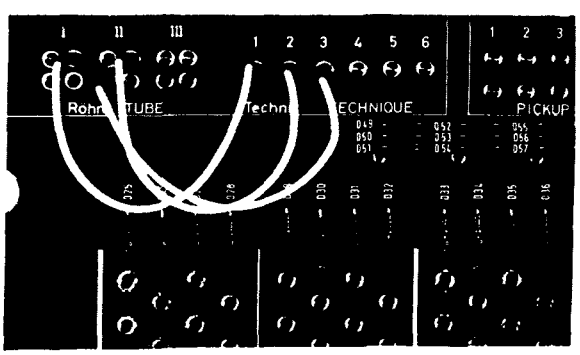

6.2.9. Programm as indicated on the Tube PCBs

max. kV - 125
high speed anode rotation (jumper "H")
max. fil. limitation for fractional focal spot (jumper "FF")

PCB8 for Tube I
PCB9 for Tube II
PCB10 for Tube III

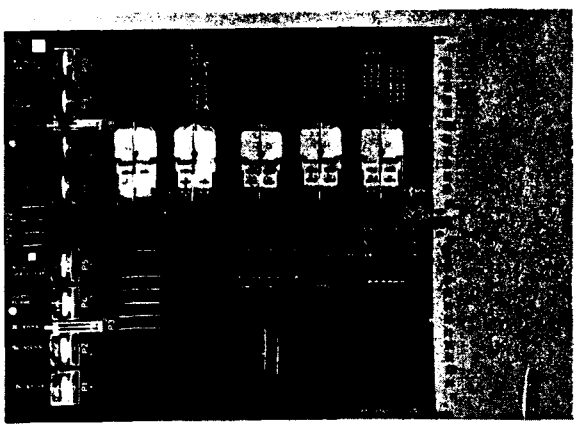

FIG. 6.2.9. PCB8

6.2.10. The control is wired in such a way that Fluoroscopy can only be done with the small focus.
For Fluoroscopy with the large focus remove jumper "1" on PCB2.

6.2.11. The control is wired in such a way that the spotfilm exposure is released by means of the footswitch.

For automatic spotfilm exposures remove jumper "4" on PCB2.

6.2.12. Normally, Fluoroscopy is only possible on technique 1.
To provide all techniques for Fluoroscopy, remove jumper "2" on PCB2 and jumper 15b25 to 15a23 (Plug Connector PCB15)

6.2.13. The control is wired in such a way that during Fluoroscopy the anode is rotating.

There is no rotation during Fluoroscopy when jumper "3" on PCB2 and also the jumper between terminals 6/11 and 6/9 is removed.

6.2.14. The control is wired in such a way that the rotor start supply voltage is 220 V.

If 110 V are required, remove jumper between terminals 6/15 and 6/16 and jumper terminals 6/15 and 6/17.

6.2.15. Between terminal 2/10 and OV there is provided a trigger contact for spotfilm exposures.
If the spotfilm device does not contain this contact, jumper 2/10 and 8/1 in the control.

7. PRELIMINARY ADJUSTMENTS

7.1. Measure the incoming line voltage across

Fuse F01 and MP
Fuse F02 and MP
Fuse F03 and MP

It should be 220 V AC (min. 200 V, max. 250 V)

7.2. On the Line Contactor Chassis connect the voltmeter to test jack "MP" and test jack "200 V AC".

7.3. Turn the control ON and adjust the single carbon brush at the upper coil of the Variac so that the meter reads 200 V.

7.4. Select:

Technique 1
200 mA
80 kV Rad
1 second
large focal spot
PT - OFF
Normal speed rotation

If this is selected, the green lamp READY should be on.

7.5. Check, whether the mA Selector stops at each selected mA step. The lamp of the selected mA Button is then illuminated.

During the motor run the yellow lamp NOT READY is on.

7.6. Vary the kV Fluoro. The motor driven Variac should react.

7.7. Vary the mAs Selector, the green lamp READY should go out for a short time.

7.8. Set the next programmed technique. Check that the motor driven Variac reacts if the kV Rad is varied.

7.9. Check that for all unprogrammed technique settings the yellow "NOT READY" and the red "TUBE LIMIT" lamps light.

7.10. If technique 6 (MAMMO) for mammography is programmed, the kV Rad must be indicated on the mA Meter within range 20 - 35 kV.

8. ADJUSTMENT OF THE DUAL TUBE LIMIT DEVICE

8.1. NOTE:

Be sure that limitation for max. kV, if necessary for any tube, has been made and that respective jumpers "H" have been removed for tubes with high speed operation. (PCB8,9,10)

Three potentiometers are provided for each of the six focal spots which are related to 6 sec, 0,4 sec and 0,02 sec (PCB 13, No. 1111-31).

In the tube list you can find respective combinations of mA and kV for the above mentioned times for the tubes mostly in use.

If any tube not shown in the Tube List is to be installed, proceed as follows:

Refer to the tube rating chart and, for each tube and focal spot, determine the maximum permissible kV for any a mA step at exposure times of 6 sec, 2 sec, 0,8 sec, 0,4 sec, 0,2 sec, 0,1 sec and 0,02 sec. Enter the mA and kV value in the attached chart. The mA step may be different for the various exposure times but it must be selected so that the associated kV value is lower than the highest permissible kV value.

8.2. ADJUSTMENT OF THE DUAL TUBE LIMIT DEVICE FOR TUBES WITH NORMAL ANODE SPEED ONLY

8.2.1. Select an exposure time of 6 sec.

Set the mA and the kV to those values you found for 6 sec.

Adjust the corresponding potentiometer until the red TUBE LIMIT lamp first goes out. Select the next higher kV step. The lamp should go on, if not, slightly turn the potentiometer counterclockwise.

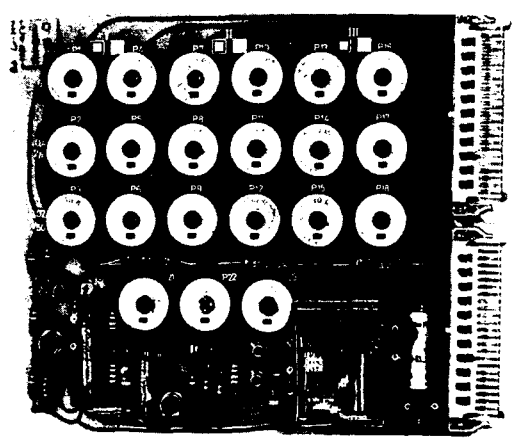

FIG. 8.2.1. PCB13

8.2.2. Select an exposure time of 0,4 sec

Set the mA and the kV to those values you found for 0,4 sec.

Adjust the corresponding potentiometer as described in para 8.2.1.

8.2.3. Select an exposure time of 0,02 sec

Set the mA and the kV to those values you found for 0,02 sec.

Adjust the corresponding potentiometer as described in para 8.2.1.

The aforementioned adjustments have to be carried out for every focal spot.

Eigentum der Firma PICKER
PROPERTY OF PICKER CORPORATION
April 1972

ATTENTION:

When the Tube Limit Device has been set for some tube, not shown in the Tube List, check as follows:

Set timer to 0,1 sec and the mA to the mA step you found for 0,1 sec.

Slowly increase the kV until the red TUBE LIMIT lamp goes out. Enter highest kV value which can still be set in the attached chart.
chart.

Repeat the measurements for 0,2 sec, 0,8 sec and 2 sec.

Compare the figures obtained in this way for 0,1 sec, 0,2 sec, 0,8 sec and 2,0 sec with the nominal values. Since the load curves of the various manufacturers differ from each other, minor deviations from the nominal value can be expected.

8.3. ADJUSTMENT OF THE DUAL TUBE LIMIT DEVICE FOR TUBES WITH HIGH ANODE SPEED ONLY

8.3.1. Set the Anode Speed Selector to position "H".

Select an exposure time of 6 sec.

Set the mA and the kV to those values you found for 6 sec at high anode speed.

Adjust the corresponding potentiometer until the red TUBE LIMIT lamp first goes out.

Select the next higher kV step. The lamp should go on, if not, slightly turn the potentiometer counterclockwise.

8.3.2. Select an exposure time of 0,4 sec

Set the mA and the kV to those values you found for 0,4 sec at high anode speed.

Adjust the corresponding potentiometer as described in para 8.3.1.

8.3.3. Select an exposure time of 0,02 sec

Set the mA and the kV to those values you found for 0,02 sec at high anode speed. Adjust the corresponding potentiometer as described in para 8.3.1.

The aforementioned adjustments have to be carried out for every focal spot.

ATTENTION:

When the Tube Limit Device has been set for some tube not shown in the Tube List, check as follows:

Set timer to 0,1 sec and the mA to the mA step you found for 0,1 sec at high anode speed. Slowly increase the kV until the red TUBE LIMIT lamp goes on. Enter the highest kV value which can still be set in the attached chart.

Repeat these measurements for 0,2 sec; 0,8 sec and 2 sec.

Compare the figures obtained in this way for 0,1 sec; 0,2 sec; 0,8 sec; and 2,0 sec with the nominal values. Since the load curves of the various manufacturers differ from each other, minor deviations from the nominal value can be expected.

8.3.4. For adjustment of normal anode speed of this tube, find the load data for normal speed out of the Tube List or the attached chart.

Set the Anode Speed Selector to position "N".

Select an exposure time of 6 sec

Set mA and corresponding kV. Adjust potentiometer P21 on PCB13 until the red TUBE LIMIT lamp first goes out. Select the next higher kV step. The lamp should go on, if not, slightly turn the potentiometer counterclockwise.

Select an exposure time of 0,4 sec

Set the mA and corresponding kV. Adjust potentiometer P22 on PCB13 until the red TUBE LIMIT lamp first goes out. Select the next higher kV step. The lamp should go on, if not,slightly turn the potentiometer counterclockwise.

Select an exposure time of 0,02 sec

Set the mA and corresponding kV. Adjust potentiometer P23 on PCB13 until the red TUBE LIMIT lamp first goes out. Select the next higher kV step. The lamp should go on, if not, slightly turn the potentiometer counterclockwise.

The adjustments described in para 8.3.4. are pre-adjustments. They are applicable to one focal spot only and must be checked for all other focal spots and re-adjusted in such a way that overload is always indicated by the red lamp. That means a subsequent adjustment can only be done towards the lower load ratings. (Adjust potentiometer in counterclockwise direction).

8.4. ADJUSTMENT OF THE DUAL TUBE LIMIT DEVICE FOR TUBES WITH NORMAL AND HIGH ANODE SPEED

First adjust the tubes with high anode speed as outlined in para 8.3.

Next adjust for tubes with normal anode speed as described in para 8.2.

---

9. CHECKOUT OF INTERNAL ROTOR STARTER

9.1. Select technique 1 (FLUORO SF)

9.2. Connect a voltmeter (300 V AC) to test jack "3" and test jack "OV" on the Testing Panel.

Depress pushbutton "S2" on PCB2 (upper PB) and check that voltmeter indicates approx. 220 V for 1,3 sec and then drops to approx. 40 - 50 V AC (running voltage).
Adjust running voltage with R23A.

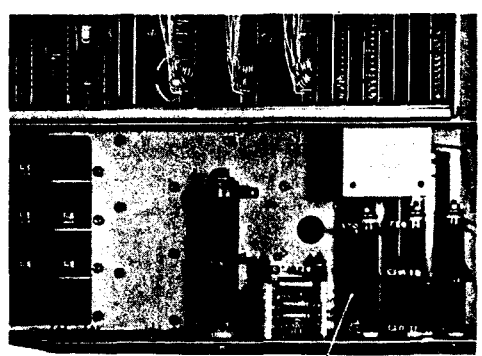

FIG. 9.2.

Eigentum der Firma PICKER
PROPERTY OF PICKER CORPORATION
April 1972

9.3. Connect the voltmeter to test jacks "1" and "2" and check that voltmeter indicates 110 V - 200 V during the start period. Adjust voltage with R21A.

9.4. Connect the voltmeter to test jacks "1" and "3" and check that voltmeter indicates 6 V - 7 V after start period. Adjust voltage with R22.

9.5. The start period is adjusted to 1,3 sec. in the factory. If a time of 2 sec is required adjust P1 on PCB2. The time can be checked by a scope or electrical counter across test jacks "START DELAY" and "OV" on the Testing Panel.

ATTENTION:

The voltage is approx. 120 V AC during the start period.

9.6. If Fluoro is done with anode rotation the start period is approx. 0,15 sec.

NOTE:

Fluoro can be initiated with pushbutton "S1" on PCB2.

9.7. The measurements described under 9.1. through 9.5. are to be done for all other connected tubes.

The voltage required in 9.3. should never be below 110 V.

The voltage required in 9.4. should never be below 6 V.

16

10. TIMER CHECKOUT

10.1. Select: technique 1 and 1 second.

10.2. Connect the oscilloscope to jack "EXP. TIME" and jack "OV" on the Testing Panel.

The voltage should be + 24 V during the exposure (before and after the exposure the voltage is + 9 V).

Oscilloscope settings:

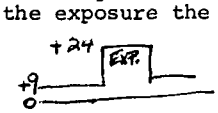

Horizontal sweep rate: 0,2 sec/div
Vertical: 10 Volts/div
Trigger: positive mode

10.3. Make a no load exposure by depressing the pushbutton "S2" on PCB2.

10.4. Check that the exposure time is 1 second.

10.5. Check that the lamp X-RAY ON lights for about 1 second.

NOTE:

After the exposure time the lamp is still on for about 0,10 sec. so that short exposure times can also be indicated.

10.6. Check the exposure time at 3 seconds.

---

11. PRE-HEATING OF THE LARGE FOCAL SPOT WHEN DOING FLUORO ON THE SMALL FOCAL SPOT ONLY

11.1. Remove the provisional jumpers between X and XS and XL.

11.2. Connect the leads 21/2 and 21/3 in the Power Module to their proper place.

11.3. Set all potentiometers for the space charge compensation on the PCB's 8, 9, 10 to mid position.

11.4. Disable the mA Stabilizer by means of the switch "S31" on the Testing Panel (position "OFF").

11.5. Remove fuse F32 (the lamp CIRCUIT BREAKER goes on).

11.6. Select: Technique 1
Small focal spot
80 kV - Fluoro
Fluoro timer to 4 min.

Turn the control ON.

WARNING:

DURING THE FOLLOWING PROCEDURES WEAR FLUOROSCOPIC GLOVES AND APRON AND TAKE PRECAUTIONS TO AVOID EXPOSURE TO THE X-RADIATION FAILURE TO COMPLY WITH THE FOREGOING MAY CAUSE SERIOUS OR FATAL BODILY INJURIES TO THE OPERATOR OR OTHER PERSONS IN THE SURROUNDING AREA.

11.7. Switch on fluoroscopy with the push-button "S1" on PCB2 and set slider on R37A and R37B in such a manner that the needle of the mA Meter in the control just deflects (less than 0,10 mA).

NOTE:

Moving the slider upwards means higher preheating current.

11.8. Insert fuse F32.

---

12. FLUOROSCOPIC , STANDBY FILAMENT

12.1. Select: Technique 1 (tube 1)
Small focal spot
80 kV - Fluoro
Fluoro timer to 4 min.
mA Stabilizer "OFF"
20 mA
75 kV Rad

12.2. Depress the Fluoro Pushbutton "S1" on PCB2 and adjust the corresponding Fluoro potentiometer (tube I, small focal spot) on PCB9 until the mA Meter indicates 3 mA.

12.3. Select the large focal spot and adjust with the corresponding Fluoro potentiometer (tube I, large focal spot) on PCB8 until the mA Meter indicates 3 mA.

Eigentum der Firma PICKER
PROPERTY OF PICKER CORPORATION
April 1972

GX 600 TIMER CALIBRATION

1. Potentiometer 5P2 is not used. It should be turned fully counterclockwise.

2. Potentiometer 5P3, adjustment of long time range

   It has to be adjusted at 3 seconds exposure time.

   Oscilloscope: horiz.: 0,5 sec/div.
   vert. : 10 V/div.
   trigger: external, positive

   Trigger signal: 5TP4 (start pulse)
   Chan. 1 input : 5TP7 (stop pulse)

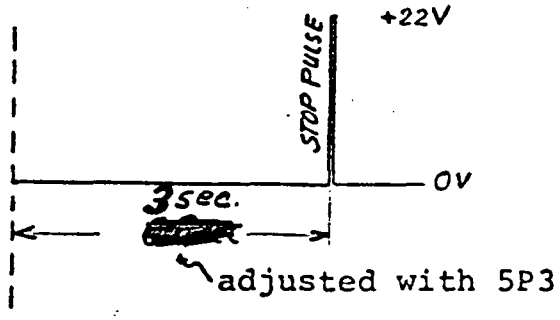

3. Oscilloscope: horiz.: 1 ms/div.
   vert. : 10 V/div.
   trigger: external, positive

   Trigger signal: 5TP4 (start pulse)
   Chan. 1 input : 5TP1 (Timer-synchr., Memory-output)

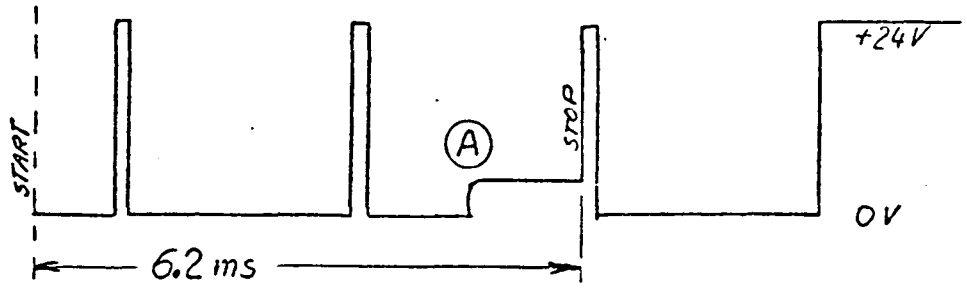

3a) Set 5P1 fully counterclockwise

3b) Select exp. time 5 ms and make an exposure with low mA and low kV.

3c) Adjust point (A) by means of 5P4.
Point (A) is the R-C-Timer stop signal.
This point must be approx. in the middle between the two shown synchronous pulses.

The stop pulse occurs at the beginning of the next synchronous pulse.

3d) By means of 5P1 adjust 6,2 ms.

3e) Check at 2 ms, 5 ms ... 32 ms, that the R-C-Timer stop signal always is between two pulses.
The R-C-Timer stop signal will not always occur in the middle between two synchronous pulses, but there should be a safety distance between the synchronous pulses.
If necessary, correct with 5P4.

12.4. Select tube II and adjust the standby filament for the small and the large focal pot with the corresponding potentiometers on PCB9.

NOTE:

The Fluoro Pushbutton "S1" on PCB2 is working on all techniques for all two or three tubes.

12.3. Select tube III and adjust the standby filament on PCB10.

---

13. kV COMPENSATION

13.1. Pull out plug EXTERN. mA METER and connect a mAs meter instead of it.

ATTENTION:

Maximum permissible inherent resistance of the meter: 25 OHM

13.2. Select: Tube II
Large focal spot
75 kV Rad
20 mA
3 seconds

13.3. Make exposure with the trigger switch and slowly turn potentiometer "20 - 100 mA" (PCB9, large focal spot) clockwise until the mA Meter in the control reads 8 mA.

3.4. Select: 100 mA and 0,6 sec.

13.5. Make exposure and watch mA Meter in the control. It should read 8 mA. If necessary, correct reading with potentiometer "20-100 mA".

13.6. Select: 300 mA and 0,4 sec.

Make exposure and turn potentiometer "150 - 400 mA" (PCB9, large focal spot) clockwise until the mAs meter reads 120 mAs.

13.7. Connect a voltmeter (150 V AC) across stud 11 and 31.

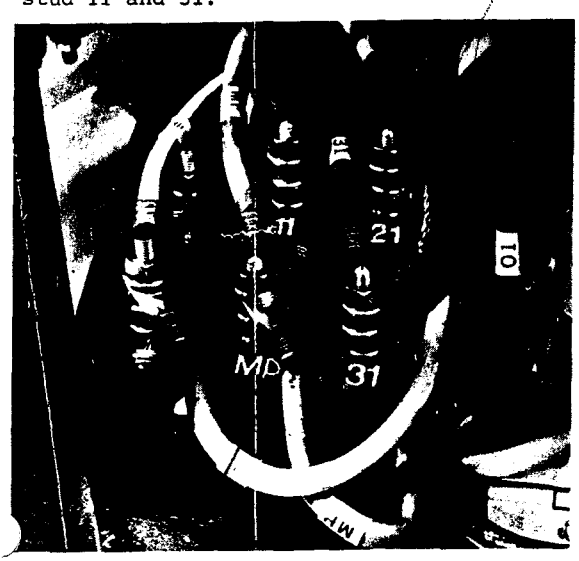

FIG. 13.7.

13.8. Switch the mA Stabilizer ON (S31)

13.9. Select: 300 mA and an exposure time long enough to get exact reading on the voltmeter during the exposure.

CAUTION:

DO NOT OVERLOAD THE TUBE. IF NECESSARY, GO TO HIGH SPEED MODE

13.10. Make exposure and read the voltage before and during exposure and record:

13.11. Before exposure 210 V
During exposure 180 V

Before the exposure the voltage should be approx. 213 V.

During the exposure the voltage has to be 179 V if the Line Resistors are properly adjusted.

13.12. In case the voltage is more (less) than 179 Volts, move the sliders on the Line Resistors R011, R012, R013 towards the left (right) end of the resistors until the correct voltage is reached.

NOTE:

If it is not possible to get 179 Volts during the exposure the line resistance is more than 0,15 OHM per phase.

Please contact CMED.

---

14. SPACE CHARGE COMPENSATION

14.1. Switch the mA Stabilizer OFF (S31 on the Testing Panel). Select tube I, large focal spot, 300 mA, 0,1 sec. Make an exposure at 45 and 125 kV and read the mAs.

If the mAs rises (falls) with increasing kV, turn the potentiometer Space Charge Compensation on PC Board 8 (Tube 1, large focal spot) clockwise (counterclockwise).

NOTE:

By this adjustment, the tube current changes so that 30 mAs (0,1 sec x 300 mA) cannot be precisely obtained. For this adjustment of the Space Charge Compensation it is only important that the mAs remain constant. The re-calibration to precisely 30 mAs is done subsequently.

---

15. mA CALIBRATION

15.1. The mA Stabilizer must be switched OFF.

15.2. Select: Tube I
large focal spot
75 kV Rad
100 mA
0,6 sec.

Make an exposure. The mA Meter in the control should read 8 mA.

NOTE:

If the mA Meter shows a lower (higher) reading, turn the related potentiometer (tube I, large focal spot, 20 - 100 mA) clockwise (counterclockwise).

Eigentum der Firma PICKER
PROPERTY OF PICKER CORPORATION

REVISIONS

This page contains corrections of mistakes in the manual text which are not performed there. To avoid wrong informations these parts are marked in the manual.

Before using the manual it is strongly recommended to check whether all mistakes are really marked.

Installation Manual GX 600 X-Ray Generator PG 61:I

Revision No. 1 Sept. 72
Page 16

11.5. Remove Fuse F32
Make provisional jumper from 2a20 (plug connector on PCB2) to test jack "OV".

11.8. Insert fuse F32
Remove jumper 2a20.

Revision No. 2 Oct. 72
Page 21

20.1.10. Remove the leads from
•15 (-24V) to 14b9 at 14b9 (PCB Chassis)
17b13 to plug 35b1 at 35b1 female (PCB Chassis)

ATTENTION:

When the Tube Limit Device has been set for some tube, not shown in the Tube List, check as follows:

Set timer to 0,1 sec and the mA to the mA step you found for 0,1 sec.

Slowly increase the kV until the red TUBE LIMIT lamp goes out. Enter highest kV value which can still be set in the attached chart.
chart.

Repeat the measurements for 0,2 sec, 0,8 sec and 2 sec.

Compare the figures obtained in this way for 0,1 sec, 0,2 sec, 0,8 sec and 2,0 sec with the nominal values. Since the load curves of the various manufacturers differ from each other, minor deviations from the nominal value can be expected.

8.3. ADJUSTMENT OF THE DUAL TUBE LIMIT DEVICE FOR TUBES WITH HIGH ANODE SPEED ONLY

8.3.1. Set the Anode Speed Selector to position "H".

Select an exposure time of 6 sec.

Set the mA and the kV to those values you found for 6 sec at high anode speed.

Adjust the corresponding potentiometer until the red TUBE LIMIT lamp first goes out.

Select the next higher kV step. The lamp should go on, if not, slightly turn the potentiometer counterclockwise.

8.3.2. Select an exposure time of 0,4 sec

Set the mA and the kV to those values you found for 0,4 sec at high anode speed.

Adjust the corresponding potentiometer as described in para 8.3.1.

8.3.3. Select an exposure time of 0,02 sec

Set the mA and the kV to those values you found for 0,02 sec at high anode speed. Adjust the corresponding potentiometer as described in para 8.3.1.

The aforementioned adjustments have to be carried out for every focal spot.

ATTENTION:

When the Tube Limit Device has been set for some tube not shown in the Tube List, check as follows:

Set timer to 0,1 sec and the mA to the mA step you found for 0,1 sec at high anode speed. Slowly increase the kV until the red TUBE LIMIT lamp goes on. Enter the highest kV value which can still be set in the attached chart.

Repeat these measurements for 0,2 sec; 0,8 sec and 2 sec.

Compare the figures obtained in this way for 0,1 sec; 0,2 sec; 0,8 sec; and 2,0 sec with the nominal values. Since the load curves of the various manufacturers differ from each other, minor deviations from the nominal value can be expected.

8.3.4. For adjustment of normal anode speed of this tube, find the load data for normal speed out of the Tube List or the attached chart.

Set the Anode Speed Selector to position "N".

Select an exposure time of 6 sec

Set mA and corresponding kV. Adjust potentiometer P21 on PCB13 until the red TUBE LIMIT lamp first goes out. Select the next higher kV step. The lamp should go on, if not, slightly turn the potentiometer counterclockwise.

Select an exposure time of 0,4 sec

Set the mA and corresponding kV. Adjust potentiometer P22 on PCB13 until the red TUBE LIMIT lamp first goes out. Select the next higher kV step. The lamp should go on, if not, slightly turn the potentiometer counterclockwise.

Select an exposure time of 0,02 sec

Set the mA and corresponding kV. Adjust potentiometer P23 on PCB13 until the red TUBE LIMIT lamp first goes out. Select the next higher kV step. The lamp should go on, if not, slightly turn the potentiometer counterclockwise.

The adjustments described in para 8.3.4. are pre-adjustments. They are applicable to one focal spot only and must be checked for all other focal spots and re-adjusted in such a way that overload is always indicated by the red lamp. That means a subsequent adjustment can only be done towards the lower load ratings. (Adjust potentiometer in counterclockwise direction).

15

8.4. ADJUSTMENT OF THE DUAL TUBE LIMIT DEVICE FOR TUBES WITH NORMAL AND HIGH ANODE SPEED

First adjust the tubes with high anode speed as outlined in para 8.3.

Next adjust for tubes with normal anode speed as described in para 8.2.

---

9. CHECKOUT OF INTERNAL ROTOR STARTER

9.1. Select Technique 1 (FLUORO SF)

9.2. Connect a voltmeter (300 V AC) to test jack "3" and test jack "OV" on the Testing Panel.

Depress pushbutton "S2" on PCB2 (upper PB) and check that voltmeter indicates approx. 220 V for 1,3 sec and then drops to approx. 40 - 50 V AC (running voltage).
Adjust running voltage with R23A.

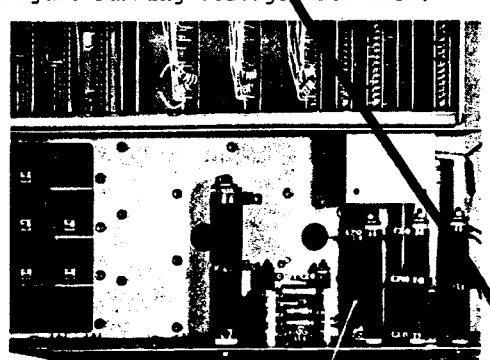

FIG. 9.2.

Eigentum der Firma PICKER
PROPERTY OF PICKER CORPORATION

12.4. Select tube II and adjust the standby filament for the small and the large focal spot with the corresponding potentiometers on PCB9.

NOTE:

The Fluoro Pushbutton "S1" on PCB2 is working on all techniques for all two or three tubes.

12.3. Select tube III and adjust the standby filament on PCB10.

---

13. kV COMPENSATION

13.1. Pull out plug EXTERN. mA METER and connect a mAs meter instead of it.

ATTENTION:

Maximum permissible inherent resistance of the meter: 25 OHM

13.2. Select: Tube II
Large focal spot
75 kV Rad
20 mA
3 seconds

13.3. Make exposure with the trigger switch and slowly turn potentiometer "20 - 100 mA" (PCB9, large focal spot) clockwise until the mA Meter in the control reads 8 mA.

13.4. Select: 100 mA and 0,6 sec.

13.5. Make exposure and watch mA Meter in the control. It should read 8 mA. If necessary, correct reading with potentiometer "20-100 mA".

13.6. Select: 300 mA and 0,4 sec.

Make exposure and turn potentiometer "150 - 400 mA" (PCB9, large focal spot) clockwise until the mAs meter reads 120 mAs.

13.7. Connect a voltmeter (150 V AC) across stud 11 and 31.

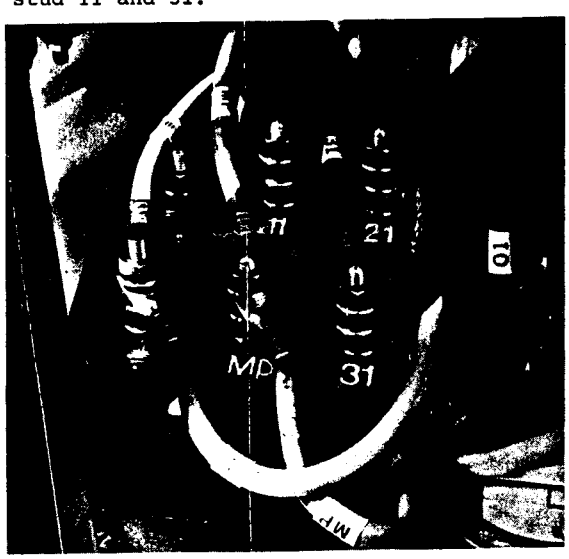

FIG. 13.7.

13.8. Switch the mA Stabilizer ON (S31)

13.9. Select: 300 mA and an exposure time long enough to get exact reading on the voltmeter during the exposure.

CAUTION:

DO NOT OVERLOAD THE TUBE. IF NECESSARY, GO TO HIGH SPEED MODE

13.10. Make exposure and read the voltage before and during exposure and record:

13.11. Before exposure 210 V 100
During exposure 180 V 150

Before the exposure the voltage should be approx. 213 V.

During the exposure the voltage has to be 179 V if the Line Resistors are properly adjusted.

13.12. In case the voltage is more (less) than 179 Volts, move the sliders on the Line Resistors R011, R012, R013 towards the left (right) end of the resistors until the correct voltage is reached.

adjusted

NOTE:

If it is not possible to get 179 Volts during the exposure the line resistance is more than 0,15 OHM per phase.

Please contact CMED.

---

14. SPACE CHARGE COMPENSATION

14.1. Switch the mA Stabilizer OFF (S31 on the Testing Panel). Select tube I, large focal spot, 300 mA, 0,1 sec. Make an exposure at 45 and 125 kV and read the mAs.

If the mAs rises (falls) with increasing kV, turn the potentiometer Space Charge Compensation on PC Board 8 (Tube 1, large focal spot) clockwise (counterclockwise).

NOTE:

By this adjustment, the tube current changes so that 30 mAs (0,1 sec x 300 mA) cannot be precisely obtained. For this adjustment of the Space Charge Compensation it is only important that the mAs remain constant. The re-calibration to precisely 30 mAs is done subsequently.

---

15. mA CALIBRATION

15.1. The mA Stabilizer must be switched OFF.

15.2. Select: Tube I
large focal spot
75 kV Rad
100 mA
0,6 sec.

Make an exposure. The mA Meter in the control should read 8 mA.

NOTE:

If the mA Meter shows a lower (higher) reading, turn the related potentiometer (tube I, large focal spot, 20 - 100 mA) clockwise (counterclockwise).

Eigentum der Firma PICKER
PROPERTY OF PICKER CORPORATION
April 1972

15.3. Select: Tube I
Large focal spot
75 kV Rad
400 mA
0,1 sec

Make an exposure. The mAs meter should read 40 mAs.

Adjust with the related potentiometer (tube I, large focal spot, 150 - 400 mA).

NOTE:

The potentiometers "150 - 400 mA" and "500 - 800 mA" are much less sensitive than the potentiometer "20 - 100 mA".

15.4. Select: Tube I
Large focal spot
75 kV Rad
600 mA
0,1 sec

Make an exposure. The mAs meter should read 60 mAs.

Adjust the reading with the related potentiometer (500 - 800 mA).

NOTE:

If lamp La2 on the printed circuit board 7 goes on during filament boost, the maximum permissible filament current of 5,5 A has been reached. If the jumper "FF" for max. 4,7 A filament for the fractional focal spot has been made on PCB8 (or 9 or 10), the lamp already goes on at a maximum filament current of approx. 4,7 A for the small focal spot. If the lamp glows just dimly, the filament current may still be slightly increased.

LAMP LA2
BOARD #7 - 5.5 AMP MAX EXCEEDED IN FIL. CONTROLLER

18

15.5. Repeat the adjustments 14 and 15 for each X-ray tube and focal spot. For adjustment use the correspondingly marked potentiometers on PCBs 8, 9, 10.

---

16. CHECKOUT OF THE MA STABILIZER

16.1. Disconnect mAs meter. Plug in again into the Testing Panel the plug EXTERN. mAs-METER.

16.2. Switch the mA Stabilizer ON (S31).

16.3. Select 20 mA, 75 kV, 3 sec. focus at your discretion.

16.4. Make an exposure. mA Meter in the control should read exactly 8 mA.

16.5. Depress the Fluoro pushbutton S1 on PCB2 Testing Panel. The reading of the mA Meter can be set with the Fluor mA Selector.

Select different Fluor kV and insure that the mA reading is independent of kV.

Eigentum der Firma PICKER
PROPERTY OF PICKER CORPORATION
April 1972

K. V. CALIBRATION FOR GX 600 (per phone call to Fred Boldt - CMED)

- Put P C B 15 on extender and jumper 15TP5 to ground
- place a good A.C. voltmeter across studs 11 and 31,
  and set K.V. to 150 K.V.
  (M.A. setting is irrelevant)
- A.C. voltmeter should read 256 VAC - adjust 15P2 if necessary
  (no load)
- Remove jumper from 15TP5
- Set control to 75 KV and 300 mA
- A.C. Voltmeter should read 213 VAC no load - adjust with 15P3,
- Load on AC volts should read 179 VAC (at 75 kV and 300 mA)

SECTION 4

PHOTOTIMER

18. GENERAL

The generator is equipped for the adaptation of a Phototimer. A subsequent adaptation can be easily carried out in the field.

The Phototimer is arranged to drive four different Pickups. The Pickups can be connected by means of plugs (Amphenol Series 91) inside the control. So all presently existing Pickups which are provided with this plug can be used.

With Phototimer the shortest exposure time is 2 milliseconds.

Two types of Phototimer are available:

Type a) NON FALLING LOAD SYSTEM

The Computer in the Non Falling Load Phototimer calculates the maximum allowable mA according to the ratings of the focal spot, the kV-setting and the Backup Time.

This mA value becomes automatically selected by the motor driven mA Selector and is kept constant during the exposure.

The Phototimer determines the length of the exposure during radiation and terminates it after the correct film density is reached. An excessive load is prevented by the Backup Timer. Depending on the position of the Density switch the Backup Time will be as follows:

Density position	1	0,1 sec
Density position	2 - 5	0,6 sec
Density position	6	2 sec

These times always have to be chosen so that there is enough space between the real exposure time and the Backup Time.

The necessary margin between Backup Time and exposure time reduces the effective use of the tube rating. Therefore the non falling load system can be recommended in conjunction with powerful focal spots only.

Type b) FALLING LOAD SYSTEM

Falling load means that during an exposure the mA becomes reduced according to the tube rating while the kV are controlled to a constant value. In such a system any exposure time corresponds to the maximum allowed load. Thus takes full advantage of the capacity of a focal spot. Independent of the exposure time the tube cannot be overloaded.

So the Falling Load Phototimer is intended to drive medium power focal spots.

The mA reduction in the GX 600 Phototimer is made in steps. The first step follows after an exposure time t1 of 0,3 sec or 0,5 sec resp. the second step after 1 sec. The final termination (Backup Time) is fixed for 3 sec.

The Computer calculates and selects the max. mA step for the first time region. By means of the Programming Leads the appropriate mA steps to the second and third region are then determined.

18.1 Non Falling Load Phototimer (Type a)

It consists of the following components:

PT Plug In Unit (operating panel)

PT Chassis containing the High Voltage Supply for the multiplier tube, the Integrator (PCB 26), the Pickup Selection Relays and the control relay RE70.

Computer (PCB 17)

Density Setting (PCB 16)

Backup Time (PCB 18a)

PT Programmer (PCB 30) always installed in the control.

Operating pushbuttons and switches:

pushbutton S 751	Phototimer ON
pushbutton S 752	Backup mAs (Special program)
pushbutton S 759 - S 761	Field Selection for three-field Pickup
switch S 763 step 1	Density Selection and selection of Backup Time 0,1 sec
switch S 763 Step 2,3,4,5	Density Selection and selection of Backup Time 0,6 sec
switch S 763 step 6	Density Selection and selection of Backup Time 2 sec
switch S 762	Density correction 5 steps with approx. 25 % density variation from step to step, controlling each of the density settings.

The Pickups are selected with the Technique Selector.

Eigentum der Firma PICKER

18.2. Falling Load Phototimer (Type b)

It consists of the following components:

PT Plug In Unit

PT Chassis containing the High Voltage Supply for the multiplier tube, the Integrator (PCB 26) as well as the Pickup Selection Relays and a set of control relays.

Computer (PCB 17)

Density Setting (PCB 16)

Falling Load Control (PCB 18b)

PT Programmer (PCB 30) always installed in the control.

PT kV Compensation Unit, 5 three phase contactors with damping resistors.

Operating pushbuttons and switches:

pushbutton S 751	Phototimer ON
pushbutton S 752	Backup mAs (Special program)
pushbutton S 759,S 760, S 761	Field Selection for three-field pickup
switch S 763 step 1,2,3	Density Selection and selection of the time t1 = 0,3 sec.
switch S 763 step 4,5,6	Density Selection and selection of the time t1 = 0,5 sec.
switch S 762	Density Correction, 5 steps with approx. 25 % density variation from step to step, controlling each of the density settings.

The Pickups are selected with the Technique Selector.

19. INSTALLATION

19.1. If the generator is supplied complete with phototimer, the following has to be done:

19.2. Connect the Pickups to the PT plugs 42,43,44 or 45 on the PT Chassis.

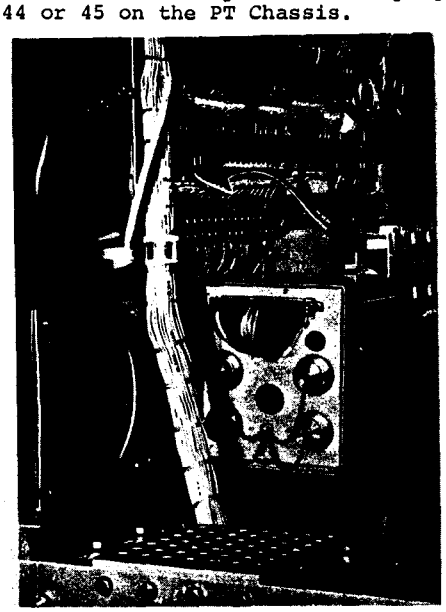

FIG. 19.2.

19.3. Make jumpers on the programming field of the PT Programmer (PCB 30) without a Programming Strip in order to assign the PT plugs to the respective Pickups, i. e. the respective technique.

The jumper is to be made by means of the Programming Leads between the jack "PICK UP" and the jack "TECHNIQUE".

The correlation with PT Pickup and PT plug is shown in the tables below:

Pickup location	TECHNIQUE
SPOTFILM	1
TABLE BUCKY	2
WALL BUCKY	3
AUX. BUCKY	4
FILM CHANGER	5
MAMMO	6

PT Plug	PICKUP
42	4
43 WALL	3
44 TABLE	2
45	1

See example PCB 30.

19.4. CONNECTION OF THE PICKUP FIELD SELECTION RELAYS (Bucky diaphragm).

19.4.1. Two-Field Pickup (Bucky phototube pickup 3247 M)

Connect the aperture relay to terminals 4/2 and 6/18 (OV) in the control.

Thereby, the following has been selected:

a) The small pickup field when the mid-push-button for the field selection S 760 on the PT operating panel is depressed. The aperture relay is energized.

b) The large pickup field when the mid-push-button for the field selection S760 is not depressed.

The aperture relay is de-energized.

19.4.2. Three-Field Pickup

The field selection relays have to be connected as follows:

Conductor Marking	Pickup Field	Control Terminal
II/4	Common	6/18
II/3	Left	4/1
II/2	Center	4/2
II/1	Right	4/3

The Pickup Fields are then selected by means of the Field Selection Pushbuttons (S 759, S 760, S 761) as indicated by the symbols on the pushbuttons.

Eigentum der Firma PICKER
PROPERTY OF PICKER CORPORATION
April 1972

orange lead - 4/2
common - 6/8

20. PHOTOTIMER INSTALLATION IN THE FIELD

20.1. NON-FALLING LOAD PT. (Type a)

20.1.1. Remove the blank cover from the front panel of the generator by removing the four nuts according to fig. 20.1.1.

Mount the PT Plug In Unit into the front panel.

FIG. 20.1.1.

20.1.2. Mount the PT into the control cabinet. see fig. 20.1.2.

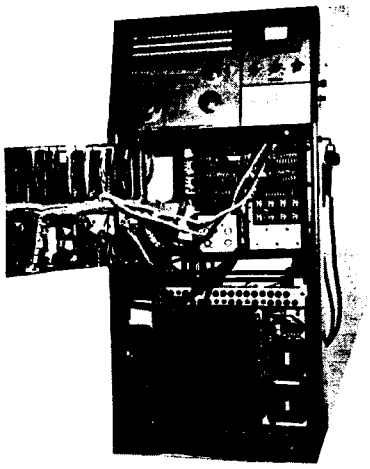

FIG. 20.1.2.

20.1.3. Insert plugs 32, 35, and 46 into the marked sockets on the PCB Chassis.

20.1.4. Plug the PCBs 16, 17, and 18 into the marked sockets on the PCB Chassis.

20.1.5. Plug the relay 12RE1 into the socket on PCB 12.

20.1.6. Solder the shielded lead coming from 16a7 to switch S 762 Arm (on the PT Plug In Unit)

20.1.7. Solder the shielded lead coming from the PT Chassis to switch S 762 position + 1/2.

20.1.8. Solder the shields of the two leads together.

20.1.9. Remove the jumpers from

17a22 to 17a24 (PCB Chassis)
12b3 to 12b7 (PCB Chassis)
S 31 to .5 (jack + 25 V on the Testing Panel)

20.1.10. Remove the leads from
15 14b9 14b9
~~.5~~ (+ 24 V) to ~~14b19~~ at ~~14b19~~
(PCB Chassis)
17b13 to Plug 35b1 at 35b1 female
(PCB Chassis)

20.1.11. Behind the front panel remove the jumper which connects the kV scale illumination (upper lamps) to the mAs scale illumination (lower lamps).

20.1.12. Connect the Pickups as described in para 19.

20. 2. FALLING LOAD PT (Type b)

20.2.1. Follow the instructions for the non falling load type under para 20.1. and additionally consider the following:

20.2.2. Mount the kV Compensation Unit into the Power Module.

20.2.3. Disconnect the three leads P11, P21, and P31 (which run to the H.T. Transformer) from the upper terminals of the contactor RESO2 and connect them to the upper terminals of the contactor RES 713 in the same order.

Connect the free leads P11, P21, and P31 which come from the contactor RES 714 to the upper terminals of RESO2 in the same order.

21

20.2.4. In the Power Module connect the control leads which come from the kV COMPENSATION UNIT as follows:

Lead		Terminal
21/1	to	21/1
21/5		21/5
21/6		21/6
21/7		21/7
21/8		21/8
21/15		21/15

20.2.5. In the control cabinet connect the control leads coming from the PT Chassis as follows:

Lead		Terminal
3/14	to	3/14
3/15		3/15
3/16		3/16
3/17		3/17
6/11		6/11
6/14		6/14
6/18		6/18

20.2.6 From the contactor RES 18 terminal D (the lower left terminal) disconnect the cable shoe to which are crimped two leads and insolate it.

20.2.7. Connect the Pickup as described in para 19.2.

21. ADJUSTMENT AND CALIBRATION

NOTE:

Precondition for the phototimer operation is that the Tube Limit Device is properly adjusted for all focal spots of the connected X-ray tubes.

21.1. PROGRAMMING

21.1.1. Non Falling Load Phototimer

Assign the Pickups to the respective 6 techniques as described in 19.3.

600 LG
400 SM

For limitation of the max. tube current (see tube rating chart), on PCB30 a jumper has to be made for each focal spot from the jack marked with a thick ring to the jack indicating the respective tube current (see example PCB30).

21.1.2. Falling Load Phototimer

The program for the falling load is fixed for each of the six focal spots on the PT Programmer (PCB30). To this end, place the Programming Strips, which must exactly correspond to the tube and the focal spot, onto the two guide pins of the respective programming fields.

Jumper all connections indicated by lines on the Programming Strips using the Programming Leads.
(see example PCB30).

Assign the Pickups to the respective 6 techniques as described in 19.3.

22

CAUTION:

TUBES FOR WHICH NO PROGRAMMING STRIPS ARE AVAILABLE CAN ONLY BE PROGRAMMED BY INSTRUCTIONS FROM THE FACTORY.

21.2. ADJUSTMENT OF THE FILM DENSITY

Six density positions (switch S 763) are available. Each of these positions can be associated to one or several Pickups as desired. They serve to compensate for different film and screen combinations etc.

The adjustment of each density position has to be done by means of a press wood phantom preferrably under such conditions as are later requested for the exposure (kV, distance, grid, screens, and cassettes).

NOTE:

The photo-multiplier tubes will not be stable on supply voltages above 950 V.

Set the supply voltage as low as possible with the Density Potentiometer 16P1. through 16P6.

Clockwise rotation results in lower supply voltage (i.e. more density).

Set the voltage at the Dynode Potentiometers as high as possible.

Counterclockwise rotation results in a higher voltage (i.e. more density).

If a density position is to be associated to several Pickups, adjust in the following order:

1) adjustment for Spotfilm Devices
2) adjustment for Buckys

NOTE:

Clockwise rotation of the Density and Dynode Potentiometers results in more density.

21.3. ADJUSTMENT ON SPOTFILM DEVICES

21.3.1. Select technique 1 FLUORO/SF.

21.3.2. Pull out plug EXT. MAS-METER on the Test Panel and connect an mAs-meter.

21.3.3. Set Density Correction Switch S 762 to position "N".

21.3.4. Align press wood phantom on the center of the selected pickup field and run the collimator to a field size of 20 cm x 20 cm.

21.3.5. Make an exposure without Phototimer at 120 kV with proper film density.

Because of the reaction time of the PT (0,002 sec) use a phantom which results in an exposure time of at least 0,01 sec.

Repeat the exposure at 50 kV and increase mAs to reach the same film density. (approx. mAs x 32)

Record the required mAs value.

Make sure instructions given in 21.3.10 are observed.

21.3.6. Switch Phototimer ON.

21.3.7. Select density position intended to be used for spotfilm.

21.3.8. Pre-set potentiometer 16P7 to approx. mid-position.

21.3.9. If using the Multifilmer or Magnafilmer and exposure without grid are required, move the grid out of the radiation beam.

If only exposures with grid are required, leave the grid in the radiation beam and set the respective compensating potentiometer to full counterclockwise position. (Refer to instruction manual of the corresponding spotfilm device).

21.3.10. Select 4 on 1 mode of the cassette on the spotfilm device.

21.3.11. Set the Dynode Potentiometer on the respective photo-multiplier tube to approx. 1/4 of the slider path in clockwise direction.

21.3.12. Make an exposure and adjust the potentiometer 16P1..in such a manner that approx. the same mAs value is obtained as on exposures without phototimer (21.3.5). Because of the reaction time of about 0,002 sec the exposure time should at least be 0,01 sec. If necessary, use a thicker phantom and repeat measurements as outlined in 21.3.5.

21.3.13. Adjust the same film density at approx. 120 kV as at 50 kV by means of potentiometer 16P7 (Density Compensation).

Clockwise rotation results in altogether more density, namely a strong increase in density at 120 kV and a slight increase in density at 50 kV.

NOTE:

If at 120 kV it is impossible to correct the film density with the potentiometer 16P7 to the same value as at 50 kV (lighter films at 120 kV), remove diode 30D62. Thereby the Density Compensation (16P7) is disabled.

Eigentum der Firma PICKER
PROPERTY OF PICKER CORPORATION
April 1972

If necessary, correct the density at 50 kV with Density Potentiometer 16P1.

21.3.14. If the adjustment has been done without grid, as indicated in 21.3.9. the grid must be moved into the radiation beam and the proper density must then be re-adjusted with the respective compensating potentiometer in the spotfilm device.

21.3.15. Select the full field mode on the spotfilm device and readjust the proper density with the compensating potentiometer in the spotfilm device.

Refer to instruction manual of the corresponding spotfilm device.

21.3.16. If multi-field Pickups are used, the remaining fields have to be adjusted with the associated Dynode Potentiometers.

21.4. ADJUSTMENT ON BUCKYS

21.4.1. Select technique 2 (BUCKY)

21.4.2. Pull out plug EXT. MAS METER on the TESTING PANEL and connect a mAs meter.

21.4.3. Set Density Correction Switch (S 762) to position "N".

21.4.4. Depress relevant Field Pushbutton in case of three or two field Pickup.

21.4.5. Align press wood phantom on the center of the selected pickup field and run the collimator to a field size of 20 cm x 20 cm.

21.4.6. Make an exposure without Phototimer at 70 kV with proper film density.

Record the required mAs value.

Because of the reaction time of the PT (0,002 sec) use a phantom which results in an exposure time of at least 0,01 sec.

21.4.7. Switch Phototimer "ON"

21.4.8. Select density position 1.

21.4.9. If density position 1 (16P1) is already used for spotfilm exposures and should also be used for bucky work, make an exposure and adjust the dynode potentiometer of the resp. photo-multiplier tube in such a manner, that the same mAs value is obtained as indicated in 21.4.6. Also refer to 21.4.12 through 21.4.14.

21.4.10. If density position 1 (16P1) is provided for bucky work only, set dynode potentiometer on the respective photo-multiplier tube to approx. 1/4 of the slider path in clockwise direction.

21.4.11. Make an exposure and adjust potentiometer 16P1 in such a manner that almost the same mAs value is obtained as on exposure without PT 21.4.6.

Because of the reaction time of about 0,002 sec, the exposure time should at least be 0,01 sec. If necessary, use a thicker phantom and repeat the measurements as outlined in 21.4.6.

1.4.12. Check for proper film density and adjust if necessary.

21.4.13. If multi-field phototimer pickups are used, the remaining fields have to be adjusted with the associated Dynode Potentiometers.

21.4.14. Proceed accordingly for all other density positions in use.

NOTE:

The mAs values quoted for the adjustment are guide lines. The proper density can only be adjusted in cooperation with the doctor according to his request.

21.5. BACKUP mAs

When actuating this pushbutton, the Phototimer operates without Falling Load.

The max. mAs and the Backup Time are freely selectable with the mAs-Selector (time selector).

The Computer (PCB 17) calculates the mA for 100 % tube load at the selected Backup Time and the selected kV.

If the max. required mAs for an exposure are known and set with the mAs-Selector, the shortest exposure time for operation with Phototimer is obtained.

To calculate only 90 % tube load when the Backup mAs pushbutton is operated, jumper 17b7 to 17b8.

If only 80 % tube load are requested, jumper 17b7 to 17b6.

21.6. ADJUSTMENT OF THE COMPUTER WHEN PHOTOTIMER IS INSTALLED IN THE FIELD

The prerequisite for this adjustment is a properly adjusted Tube Limit Device. Proceed according to the following order:

21.6.1. Select tube.

21.6.2. Select large focal spot.

21.6.3. Program max. mA limitation for 600 mA on the PT Programmer (PCB3o) for selected tube and focus.

See example PCB3O.

21.6.4. Set the Anode Speed Selector (S 21) to "H" (high speed).

21.6.5. Select 0,5 sec with mAs Selector.

21.6.6. Find out of the tube rating chart the max. load for the selected focal spot at 0,5 sec.

21.6.7. Starting out from this load, calculate according to any mA step the related kV using the following formula:

$$kV = \frac{kW}{mA}$$

Example: The load at 0,5 sec is 70 kW

$$\frac{70\ kW}{600\ mA} = 117\ kV$$

21.6.8. Depress pushbutton Phototimer ON and pushbutton BACKUP mAs.

21.6.9. Set 17P1 in such a manner that the mA Selector switches over from the selected mA step (600 mA in the example) to the next lower mA step (500 mA) at the calculated kV (117 kV in the example) when the kV Selector is turned upwards.

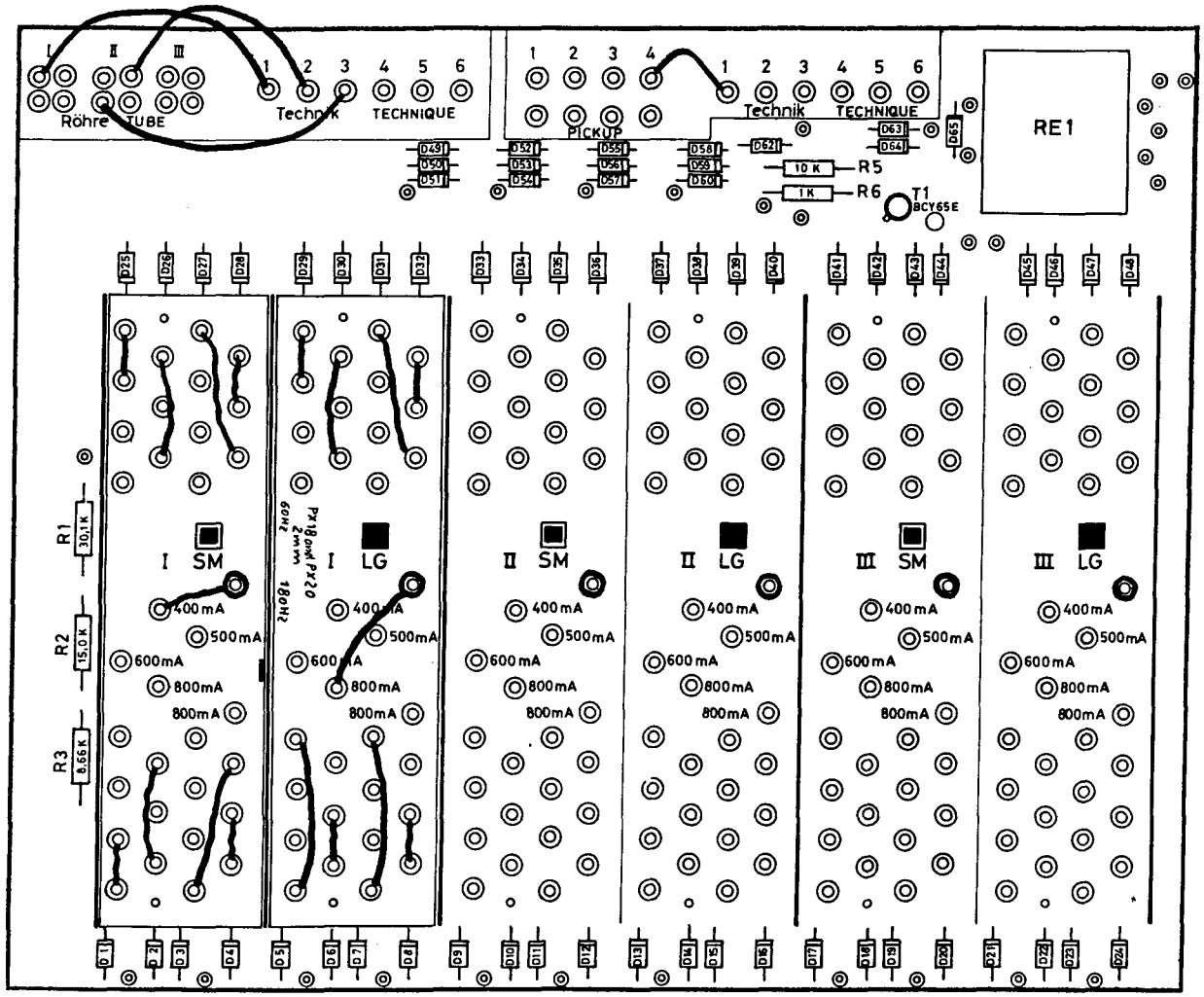

Example: Generator with Falling Load PT
Tube 1 on Technique 1
Tube 2 on Technique 2 and 3
Pickup 4 on Technique 1

PROGRAMMER PCB 30

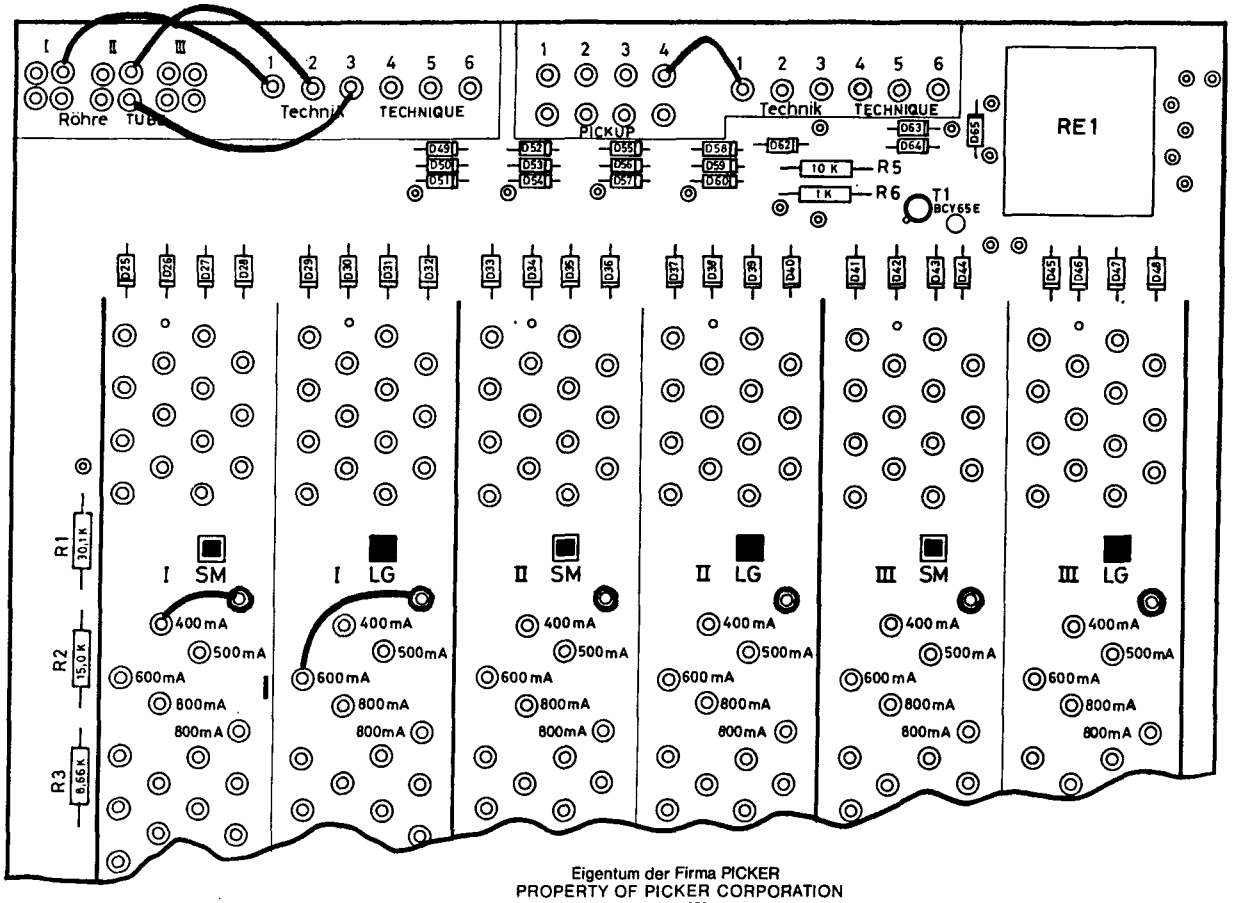

Example: Generator with None Falling Load PT
Tube 1 on Technique 1
Tube 2 on Technique 2 and 3
Pickup 4 on Technique 1

Eigentum der Firma PICKER
PROPERTY OF PICKER CORPORATION
April 1972

SECTION 5

REFERENCE DATA GX 600

	Tube Lists for Dual Tube Limit Adjustment
	Tube Limit Device Calibration Lists
1221-D1	High Tension Transformer Load Curve
1123-27	25 V and 15 V Supply PCB 21
1111-40b	Surge Surpressor PCB 28
1123-26b	Programmer PCB 30
1123-S7	Schematic GX 600
1123-21	Logic Circuit PCB 2
1123-S12	Logic Circuit
1123-S13	Transformers
1123-24	kV Selector Drive PCB 15
1111-34	Circuit Breaker PCB 19
1123-S5	kV Selector Drive
1123-S14	Circuit Breaker
1123-20	24 V Power Supply PCB 1
1123-S8	24 V Power Supply
1123-39	Timer PCB 5
1123-23	Core Memory PCB 6
1111-35	Impuls Transformer PCB 25
1123-38	Fluoro Signal PCB 23
1123-S3	Timer
1123-37	mA Stabilizer PCB 7
1123-S2	mA Stabilizer
1123-22	Tube PCB 8, 9, 10
1123-S15	Tube Board
1114-21	Tube Limit Power Supply PCB 11
1111-30	Tube Limit PCB 12
1111-31	Potentiometer PCB 13
1123-S4	Dual Tube Limit Device
1123-25	mA Selector Drive PCB 14
1123-S6	mA Selector with Falling Load
1123-S10	mA Selector without Falling Load
1123-S11	Illumination
1215-S1	H.T. Generator
1123-3-V1	Line Contactor Chassis
1123-4-V2	19" Unit
1123-5-V1	mA Selector
1123-5-V2	Selector PCBs
1123-6-V1	Control Part
1123-10-V1	Control Panel
1123-11-V1	SCR Power Contactor
1111-11-V3	mA Meter Protection

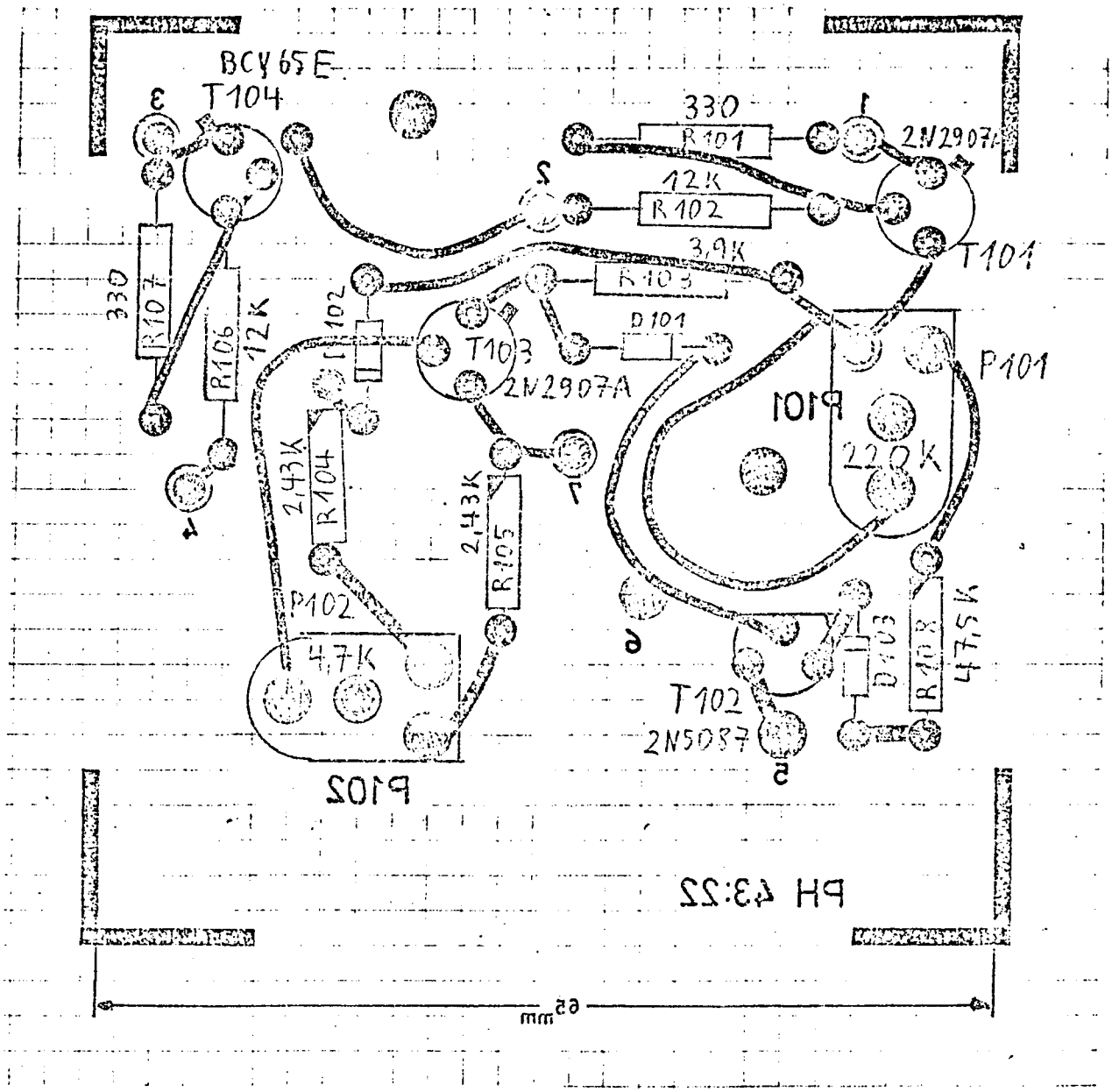

1N4148

In die mit Ziffern 1 bis 7 bezeichneten Löcher, Litzen von 25 cm Länge löten.

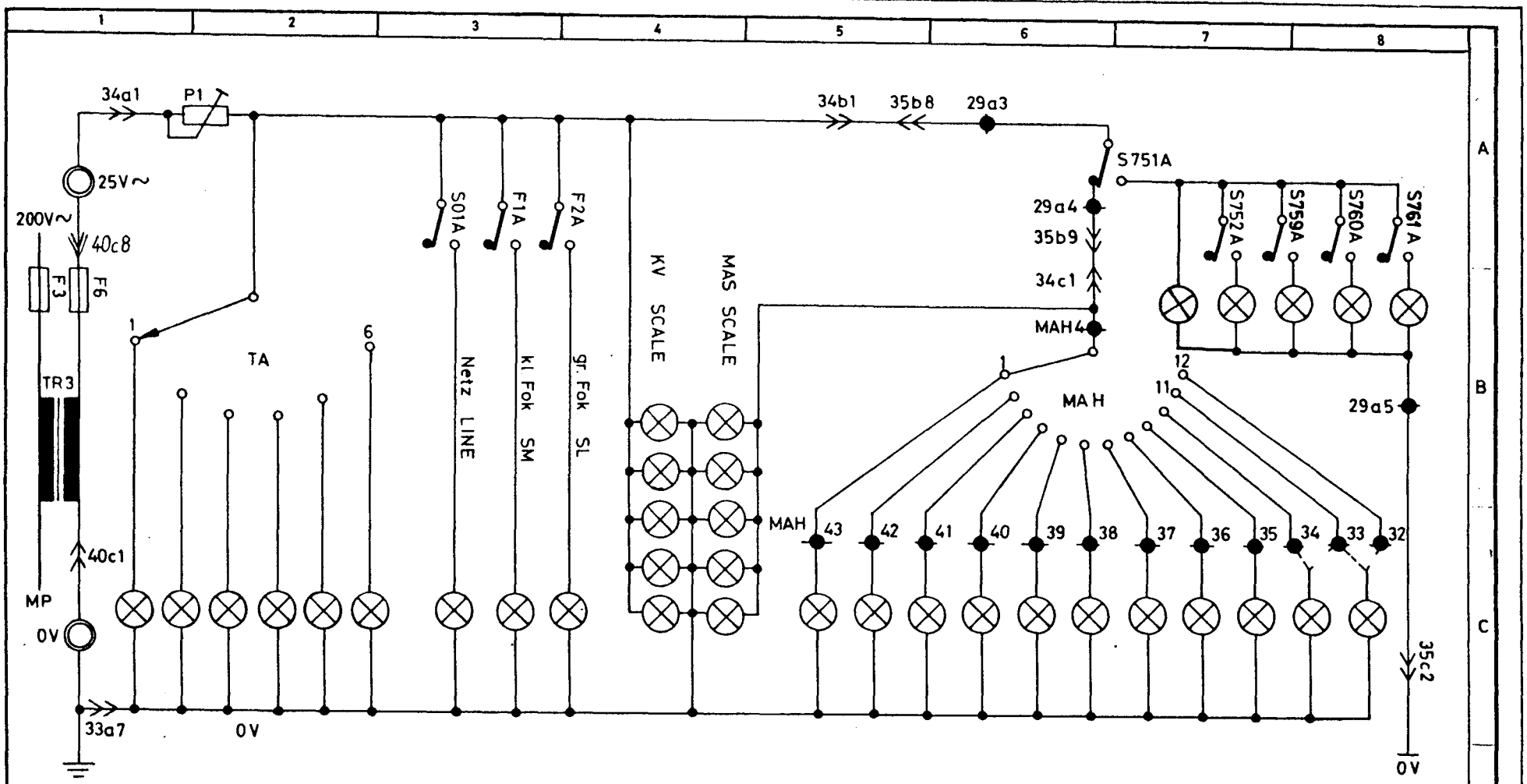

7	X				
6	X				
5	X				
4	X				
3	X				
2	X				
1	X				
Nr.		Änd.-Nr.	Tag	Bearb	Gepr.

Oberfläche

Paßmaß	Ob. Abmaß	Unt. Abmaß
Bearbeitung	Freimaßtoleranzen	
Werkstoff		
Sach.-Nr.		

PICKER
ROENTGEN GMBH
Röntgenwerk
4992 ESPELKAMP

	Tag	Name
Bearb	23.2.72	[illegible]
Gepr.	23.2.72	Kö
Norm		
Ges		

Benennung
Beleuchtung
ILLUMINATION

Maßstab:
Modell-Nr.
Zeichng.-Nr. 1123-S11
Ersatz für vom

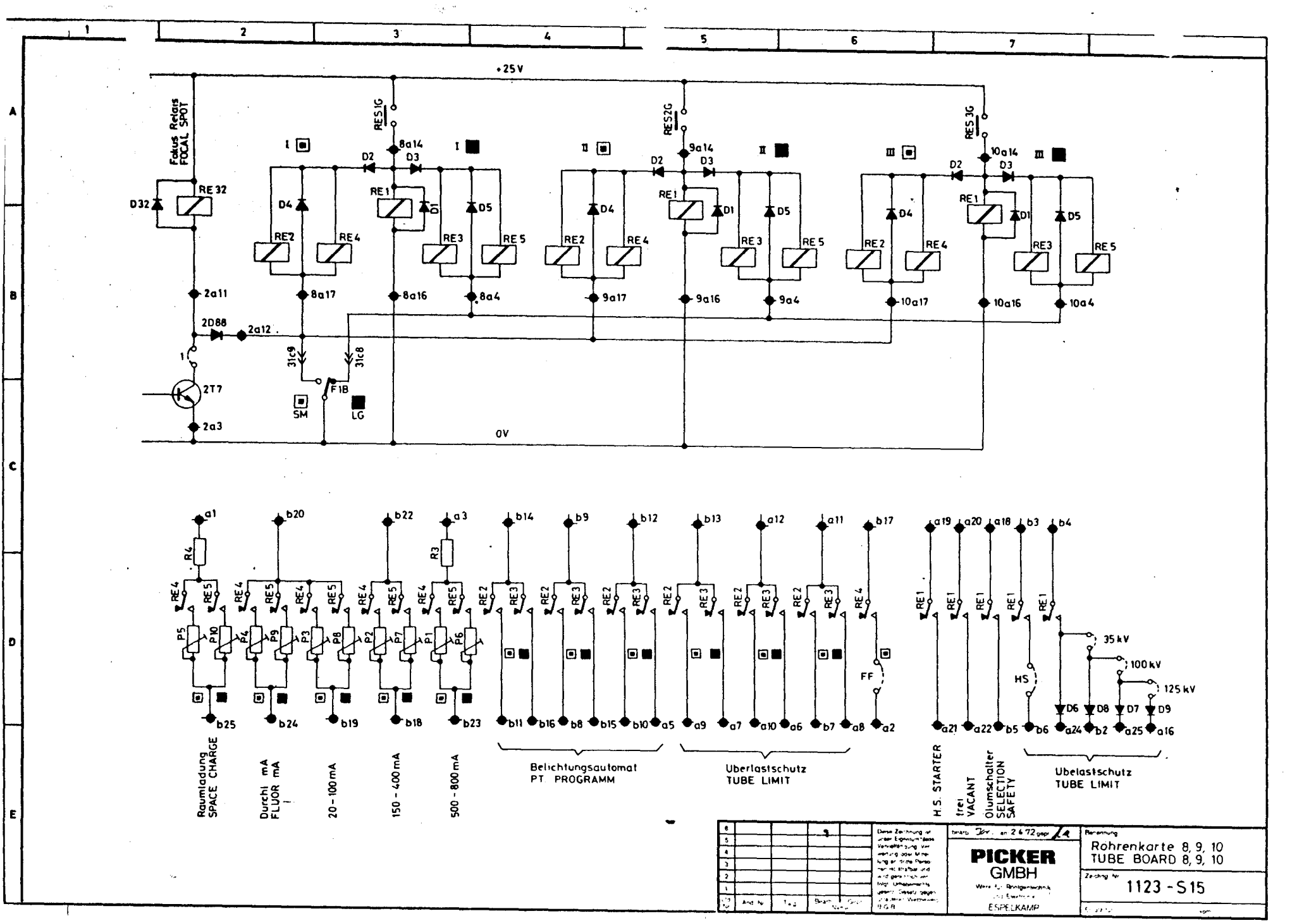

+25V
Fokus Relais
FOCAL SPOT
RE 32
D32
RES1G
RES2G
RES3G
8a14
9a14
10a14
D2
D3
D4
D5
D1
RE1
RE2
RE3
RE4
RE5
2a11
8a17
8a16
8a4
9a17
9a16
9a4
10a17
10a16
10a4
2D88
2a12
31c9
31c8
F1B
SM
LG
2T7
2a3
0V
a1
b20
b22
a3
b14
b9
b12
b13
a12
a11
b17
a19
a20
a18
b3
b4
R4
R3
P5
P10
P4
P9
P3
P8
P2
P7
P1
P6
FF
HS
35 kV
100 kV
125 kV
D6
D8
D7
D9
b25
b24
b19
b18
b23
b11
b16
b8
b15
b10
a5
a9
a7
a10
a6
b7
a8
a2
a21
a22
b5
b6
a24
b2
a25
a16
Raumladung
SPACE CHARGE
Durchl mA
FLUOR mA
20 - 100 mA
150 - 400 mA
500 - 800 mA
Belichtungsautomat
PT PROGRAMM
Uberlastschutz
TUBE LIMIT
H.S. STARTER
frei
VACANT
Ölumschalter
SELECTION
SAFETY
Ubelastschutz
TUBE LIMIT
PICKER
GMBH
ESPELKAMP
Rohrenkarte 8, 9, 10
TUBE BOARD 8, 9, 10
1123 - S15

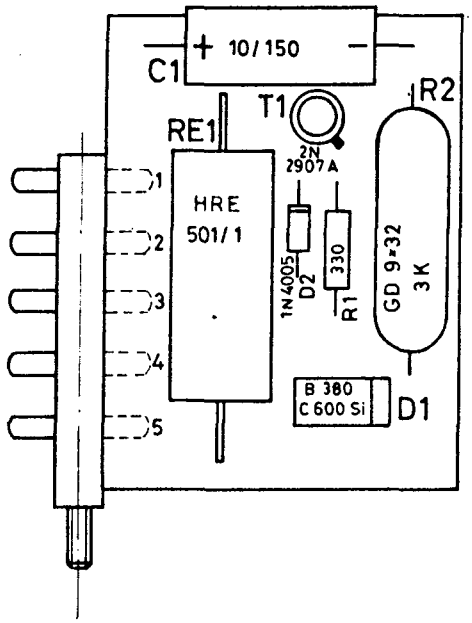

Karte 23
BOARD 23

7	X							
	X							
	X							
4	X					Paßmaß	Ob. Abmaß	Unt. Abmaß
3	X					Bearbeitung		Freimaßtoleranzen
2	X							
1	X					Werkstoff		
Nr.		Änd.-Nr.	Tag	Bearb.	Gepr.			
Oberfläche								

PICKER
ROENTGEN GMBH
Röntgenwerk
4992 ESPELKAMP

	Tag	Name
Bearb.	15.5.72	Kuno
Gepr.		
Norm		

Durchleuchtungs-
Signal-Karte

FLUORO. SIGNAL PCB

Maßstab 1:1

Zeichng.-Nr. 2019/ 1123 - 38

uteren Wettbewerb B.G.B.)

Zeichn.-Nr. weiß aufgedruckt

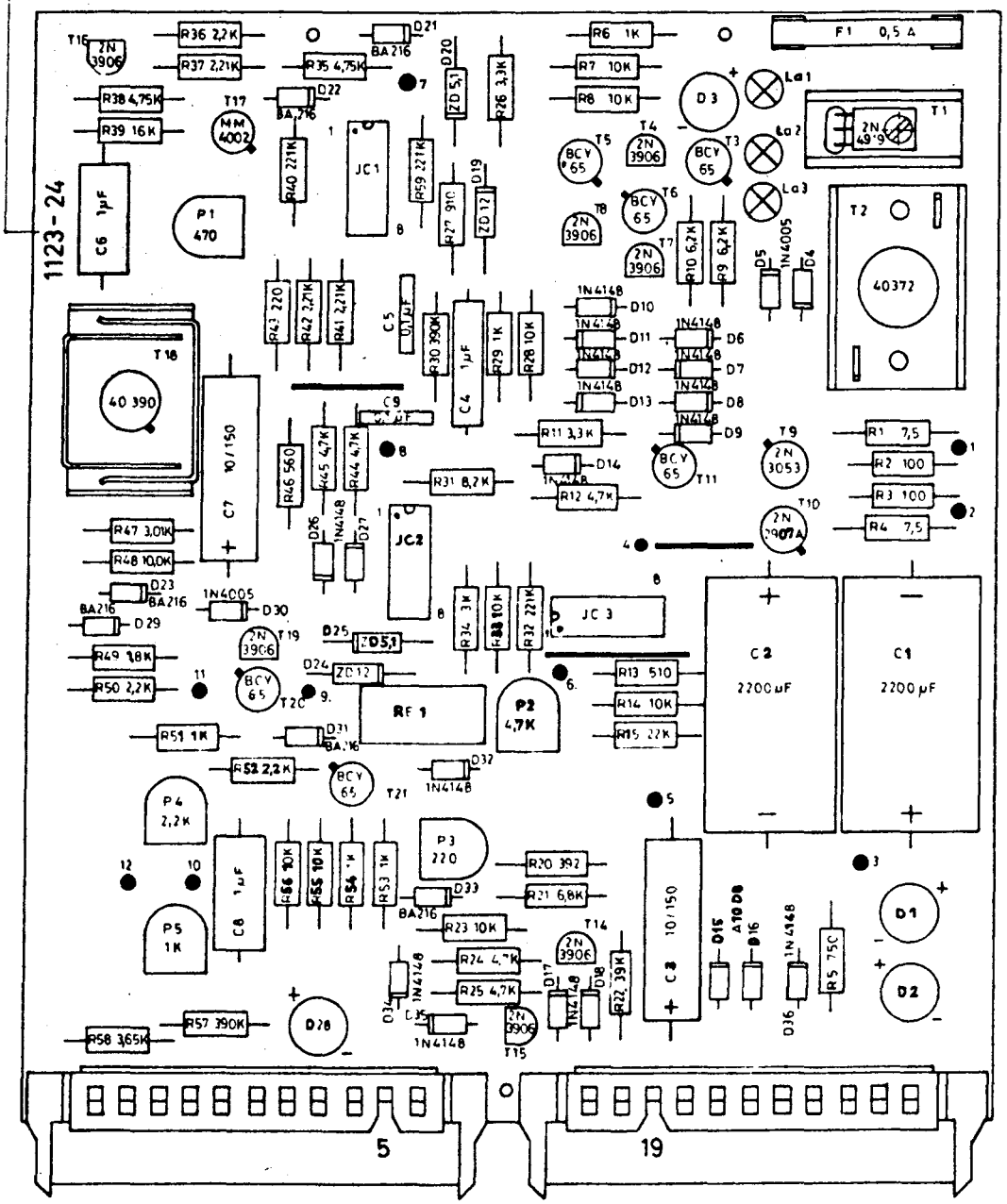

Karte 15
BOARD 15

B 250 C800 Si

Nr		Änd.-Nr.	Tag	Bearb.	Gepr.
7	X				
6	X				
5	X				
4	X				
3	X				
2	X				
1	X				

Oberfläche

Paßmaß	Ob. Abmaß	Unt. Abmaß
Bearbeitung	Freimaßtoleranzen	
Werkstoff		
Sach.-Nr.		

PICKER
ROENTGEN GMBH
Röntgenwerk
4992 ESPELKAMP

	Tag	Name
Bearb.	10.2.72	Kunze
Gepr.		
Norm		
Ges.		

Benennung
KV-Regulierung
KV-SELECTOR DRIVE

Maßstab 1:1
Modell-Nr.
Zeichng.-Nr. 1959 1123 - 24
Ersatz für vom

Diese Zeichnung ist unser Eigentum. Jede Veröffentlichung, Verfügung oder Mitteilung an dritte Personen ist strafbar und wird gerichtlich verfolgt. (Urheberrechtsgesetz, Gesetz gegen unlauteren Wettbewerb B.G.B.)

Zeichnungsnummer weiß aufgedruckt

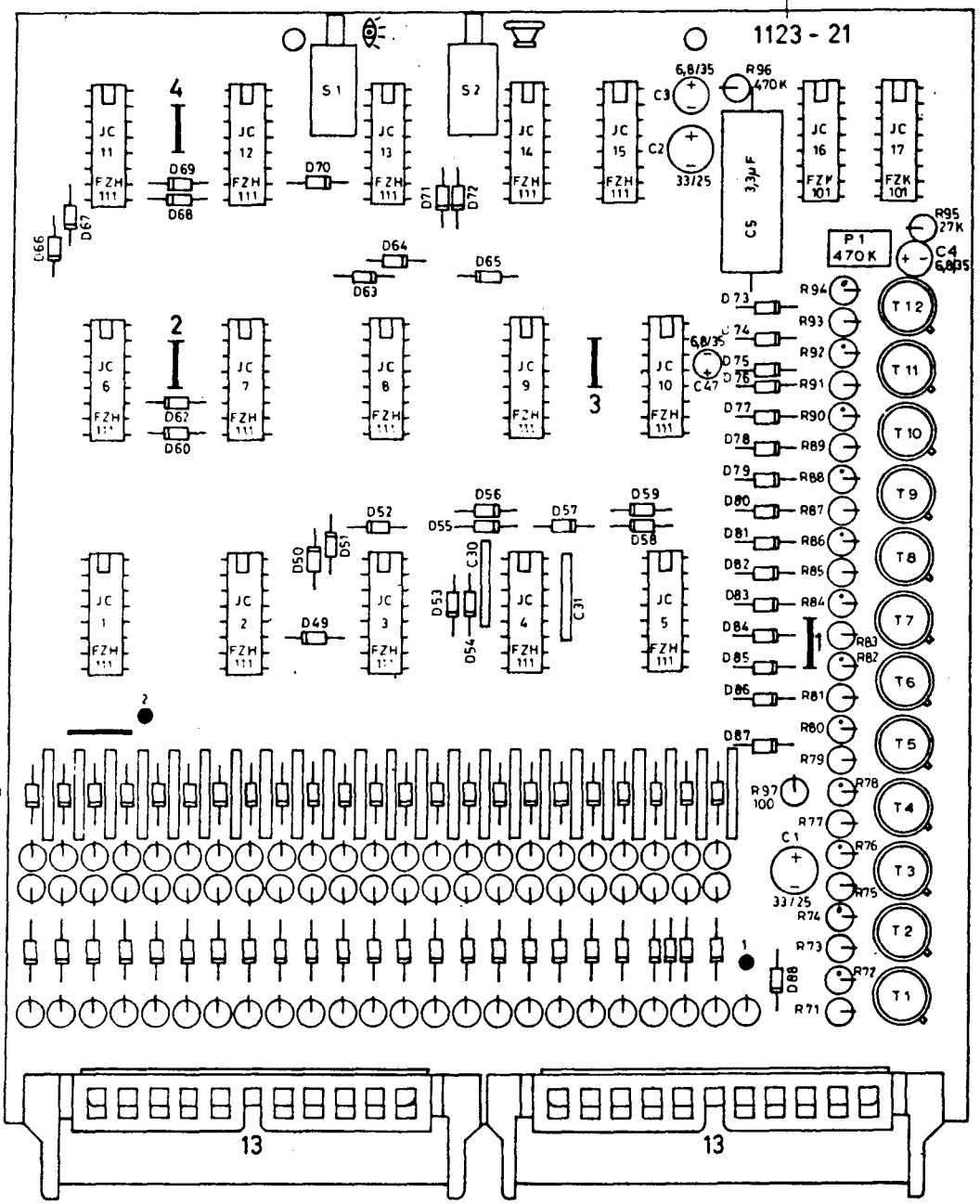

C7 bis C29

D26 bis D48

R48 bis R70 10K

R25 bis R47 1K

D1 bis D25 außer D21

R1 bis R24 4,7K

Karte 2
BOARD 2

C7 bis C31 GFO 615C 0,1µF

D1 bis D87 1N 4148

D88 1N 4005

T1 bis T12 2N 3053

2,7 K

680 Ω

7	X				
6	X				
5	X				
4	X				
3	X				
2	X				
1	X				
N		Änd Nr	Tag	Bearb	Gepr

Oberfläche

Paßmaß | Ob Abmaß | Unt Abmaß

Bearbeitung | Freimaßtoleranzen

Werkstoff

Sach-Nr

PICKER
ROENTGEN GMBH
Rontgenwerk
4992 ESPELKAMP

	Tag	Name
Bearb	17.9.71	Kunze
Gepr		
Norm		
Ges		

Benennung
Steuerkreis
LOGIC CIRCUIT

Maßstab

Modell-Nr

Zeichng-Nr 1123 - 21

1901

Ersatz für vom

Mitteilung an dritte Personen ist strafbar und wird gerichtlich verfolgt (Urheberrechtsgesetz, Gebrauchsmusterrechtsgesetz, Wettbewerbsgesetz)

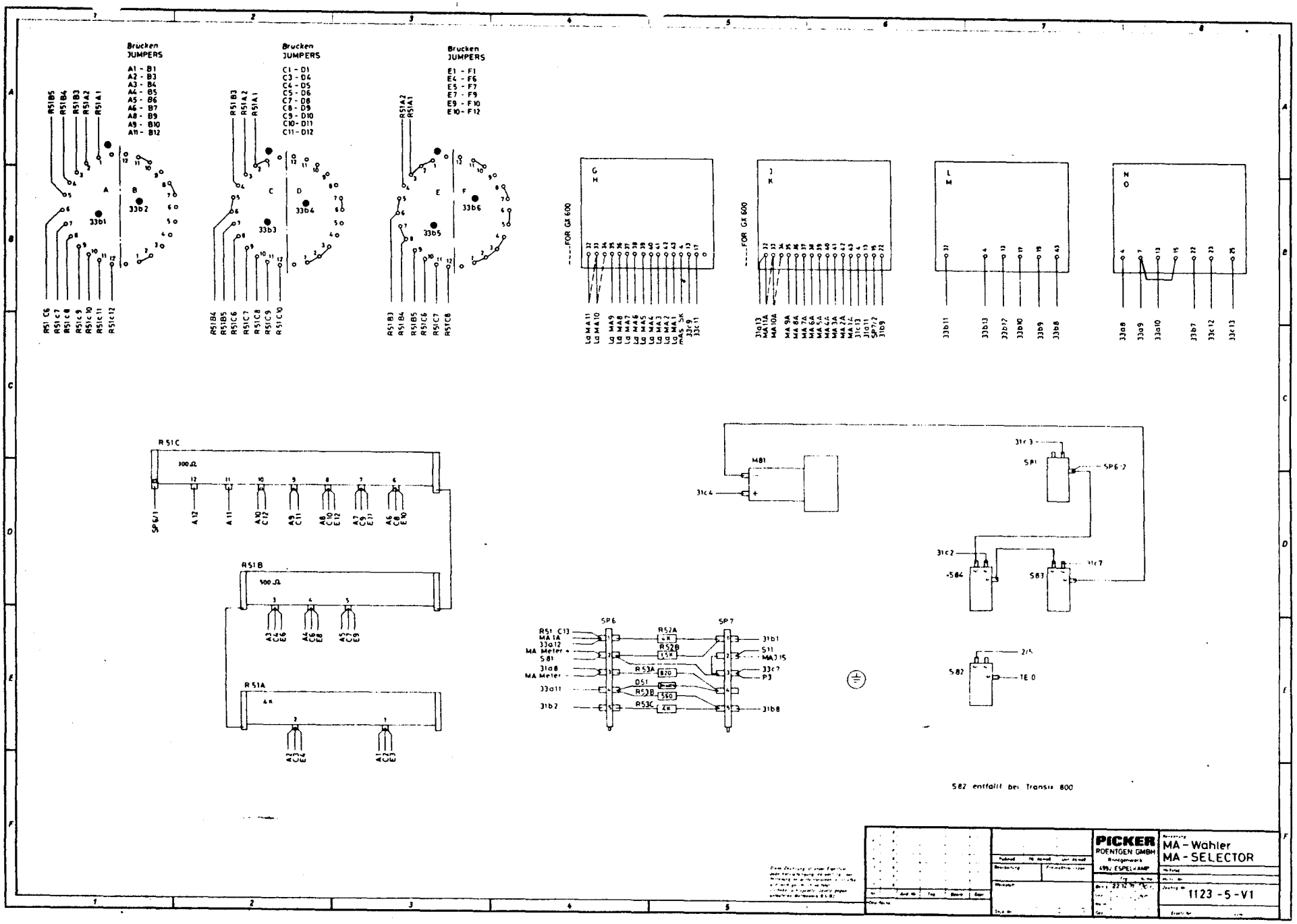
Brücken
JUMPERS
A1 - B1
A2 - B3
A3 - B4
A4 - B5
A5 - B6
A6 - B7
A8 - B9
A9 - B10
A11 - B12
Brücken
JUMPERS
C1 - D1
C3 - D4
C4 - D5
C5 - D6
C7 - D8
C8 - D9
C9 - D10
C10 - D11
C11 - D12
Brücken
JUMPERS
E1 - F1
E4 - F6
E5 - F7
E7 - F9
E9 - F10
E10 - F12
FOR GX 600
FOR GX 600
R51C
300 Ω
R51B
500 Ω
R51A
4K
SP6
SP7
R52A
R52B
R53A
R53B
R53C
S81
S82
S83
S84
M81
S11
MA 15
TE 0
S82 entfällt bei Transix 800
PICKER
ROENTGEN GMBH
MA - Wähler
MA - SELECTOR
1123 - 5 - V1

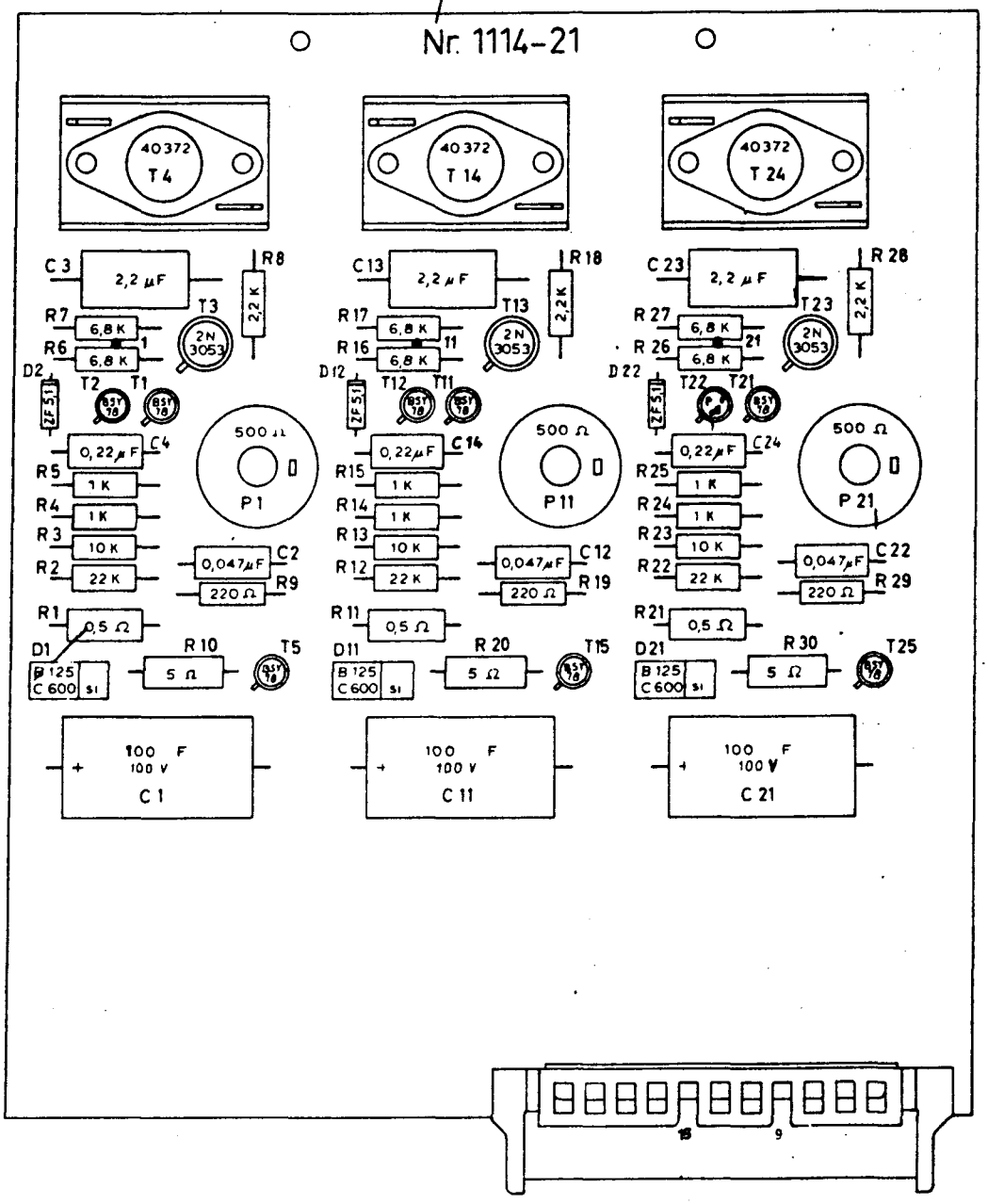

		6				
		5				
		4				
		3				
Paßmaß	Abmaß	2				
Oberfläche		1	4191	16.12.68	[illegible]	
		Lfd. Nr.	Änd.-Nr.	Tag	Bearb. Name	Gepr. Name

Bearbeitung

Diese Zeichnung ist unser Eigentum. Jede Vervielfältigung, Verwertung oder Mitteilung an dritte Personen ist strafbar und wird gerichtlich verfolgt. (Urheberrechtsgesetz, Gesetz gegen unlauteren Wettbewerb, B. G. B.)

Freimaßtoleranzen:

Maßstab: 1:1

Werkstoff:

PICKER GMBH
Werk für Röntgentechnik und Elektronik
ESPELKAMP-MITTWALD

Netzkarte
TUBE LIMIT POWER SUPPLY

	Tag	Name
Bearb.	23 2 68	[illegible]
Gepr.	5 3 68	[illegible]
Normgepr.		
Ges.		

Modell Nr.: 148/ 1114-21

Ersatz für: vom

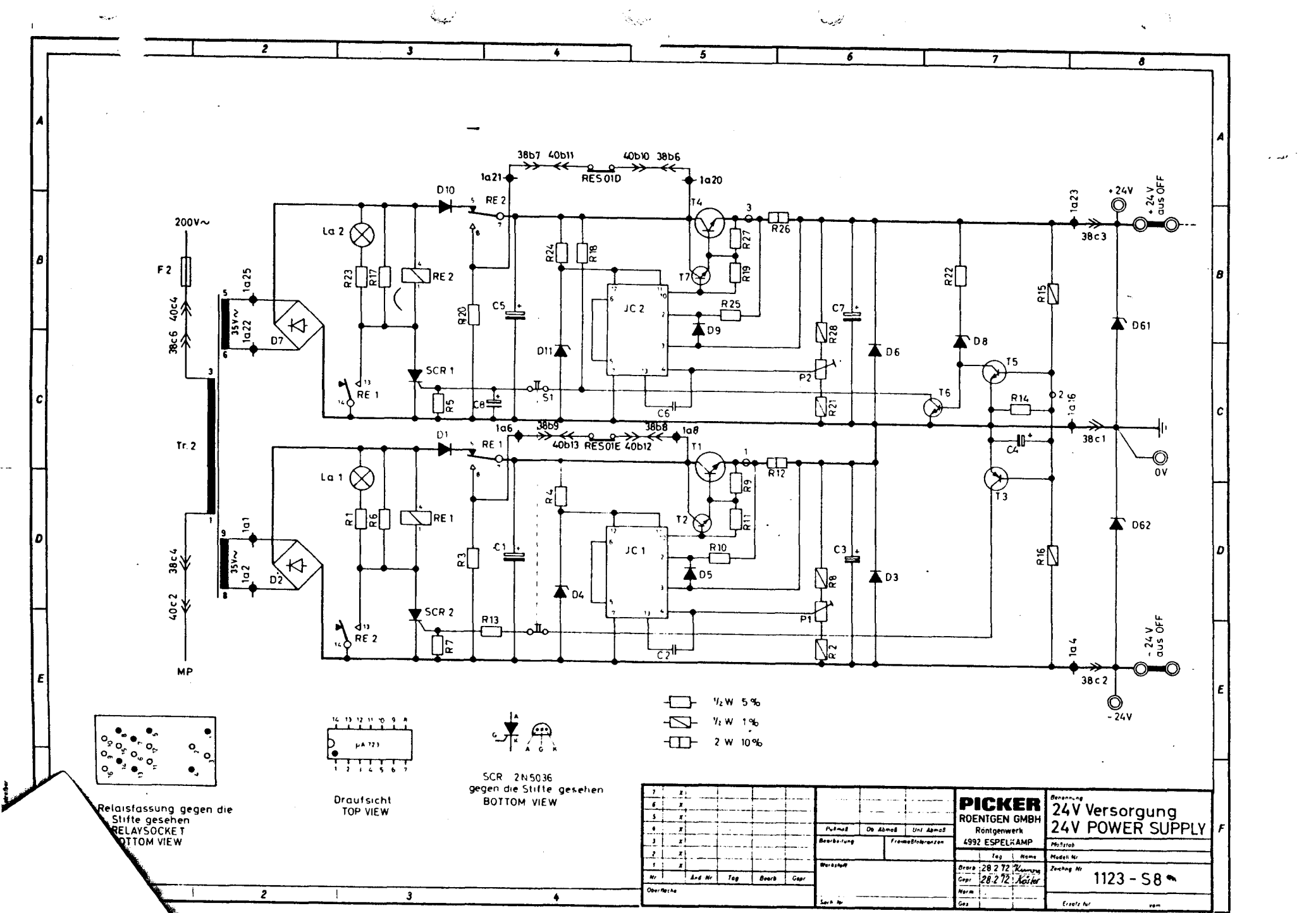

200V~
F2
38c6 40c4
Tr. 2
38c4
40c2
MP
35V~
1a25
1a22
1a1
1a2
D7
D2
La 2
La 1
R23
R17
R1
R6
RE 2
RE 1
SCR 1
SCR 2
R5
R7
R20
R3
C5
C8
C1
R13
D10
D1
1a21
1a20
1a6
1a8
38b7 40b11
40b10 38b6
RES01D
38b9
40b13 RES01E 40b12
38b8
R24
R18
R4
D11
D4
JC 2
JC 1
T4
T7
T1
T2
R27
R19
R25
R10
R26
R12
R9
R11
D9
D5
C6
C2
C7
C3
R28
R21
R8
R2
P2
P1
D6
D3
R22
D8
T5
T6
T3
R15
R14
R16
C4
1a23
1a16
1a4
38c3
38c1
38c2
+24V
+24V aus OFF
0V
-24V
-24V aus OFF
D61
D62
½W 5%
½W 1%
2 W 10%
Relaisfassung gegen die Stifte gesehen
RELAYSOCKET
BOTTOM VIEW
Draufsicht
TOP VIEW
SCR 2N5036
gegen die Stifte gesehen
BOTTOM VIEW
PICKER
ROENTGEN GMBH
Röntgenwerk
4992 ESPELKAMP
Benennung
24V Versorgung
24V POWER SUPPLY
Maßstab
Modell Nr
Zeichng Nr
1123 - S8
Ersatz für
vom
Bearb 28.2.72
Gepr 28.2.72
Nr
Änd Nr
Tag
Bearb
Gepr
Oberfläche
Pulmaß
Ob Abmaß
Unt Abmaß
Bearbeitung
Freimaßtoleranzen
Werkstoff
Sach Nr
Tag
Name
Norm
Ges

Zeichnungsnr. weiß aufgedruckt

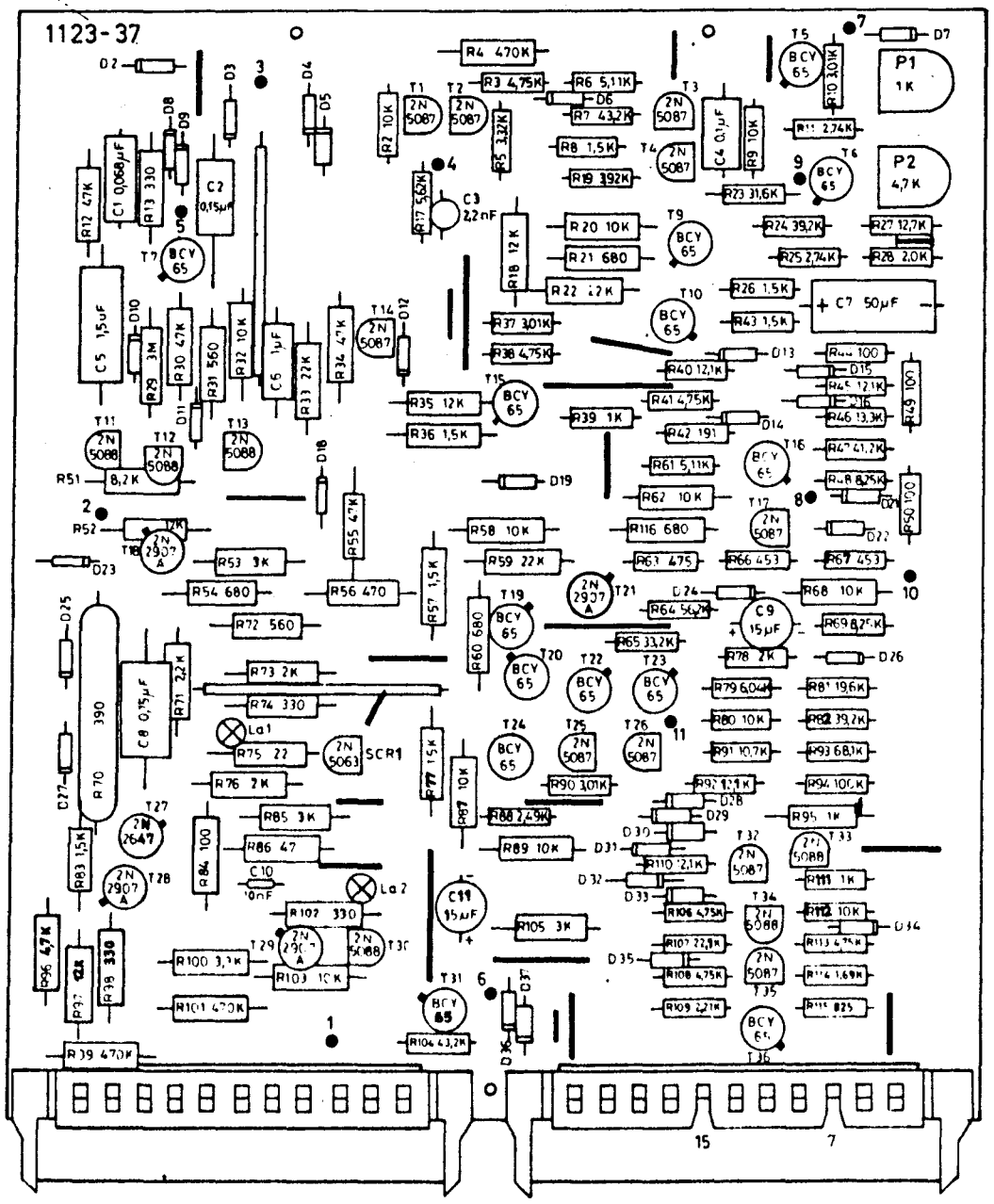

Karte 7
BOARD 7

1N4148

7	X				
6	X				
5	X				
4	X				
3	X				
2	X				
1	X				
Nr.		Änd.-Nr	Tag	Bearb	Gepr

Oberfläche

Paßmaß	Ob. Abmaß	Unt. Abmaß
Bearbeitung	Freimaßtoleranzen	
Werkstoff		
Sach-Nr		

PICKER
ROENTGEN GMBH
Röntgenwerk
4992 ESPELKAMP

	Tag	Name
Bearb	3 3 72	[illegible]
Gepr		
Norm		
Ges		

Benennung
mA-Stabilisator
MA-STABILIZER

Maßstab 1 : 1
Modell-Nr
Zeichng.-Nr 1123 - 37
1973
Ersatz für vom

Diese Zeichnung ist Eigentum
Jede Veröffentlichung, Verwertung oder Mitteilung an dritte Personen ist strafbar und wird gerichtlich verfolgt
(Urheberrechtsgesetz, Gesetz gegen unlauteren Wettbewerb BGB)

Zeichnungsnr. weiß aufgedruckt

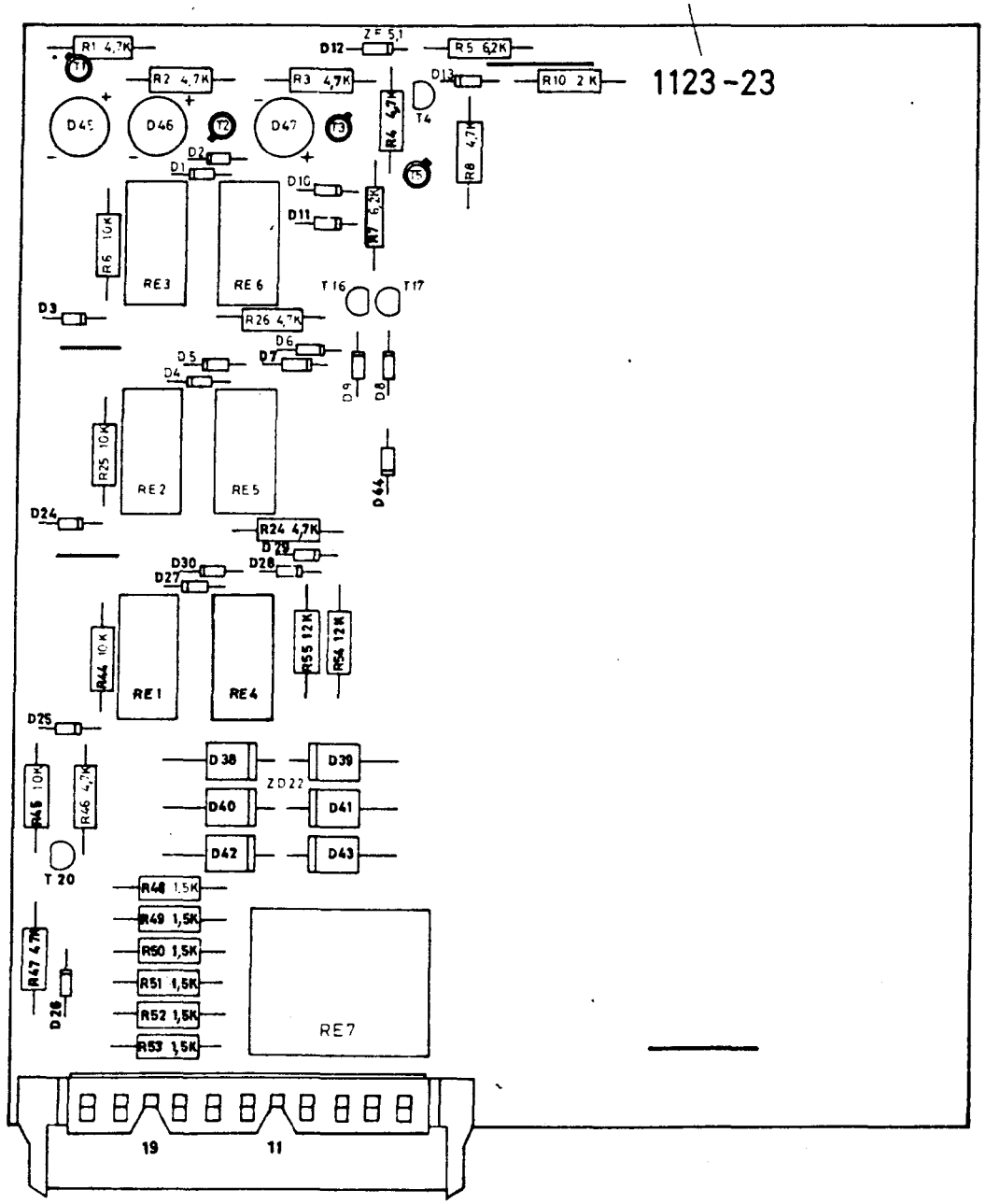

BCY 65 VII

2N3906

1N4148

B250C800Si

Karte 6 Gedächtnis

BOARD 6 CORE MEMORY

Nr	Änd.-Nr.	Tag	Bearb.	Gepr.
7	X			
6	X			
5	X			
4	X			
3	X			
2	X			
1	X			

Oberfläche

Paßmaß | Ob. Abmaß | Unt. Abmaß

Bearbeitung | Freimaßtoleranzen

Werkstoff

Sach-Nr.

PICKER
ROENTGEN GMBH
Röntgenwerk
4992 ESPELKAMP

	Tag	Name
Bearb	26 172	
Gepr		
Norm		
Ges		

Benennung
Gedächtnis
CORE MEMORY

Maßstab

Modell-Nr

Zeichng.-Nr
1918 1123-23

Ersatz für vom

Diese Zeichnung ist unser Eigentum. Jede Vervielfältigung, Verwertung oder Mitteilung an dritte P... ist strafbar und wird gerichtlich v... (Urheberrechtsgesetz, Gesetz gegen unlauteren Wettbewerb BGB).

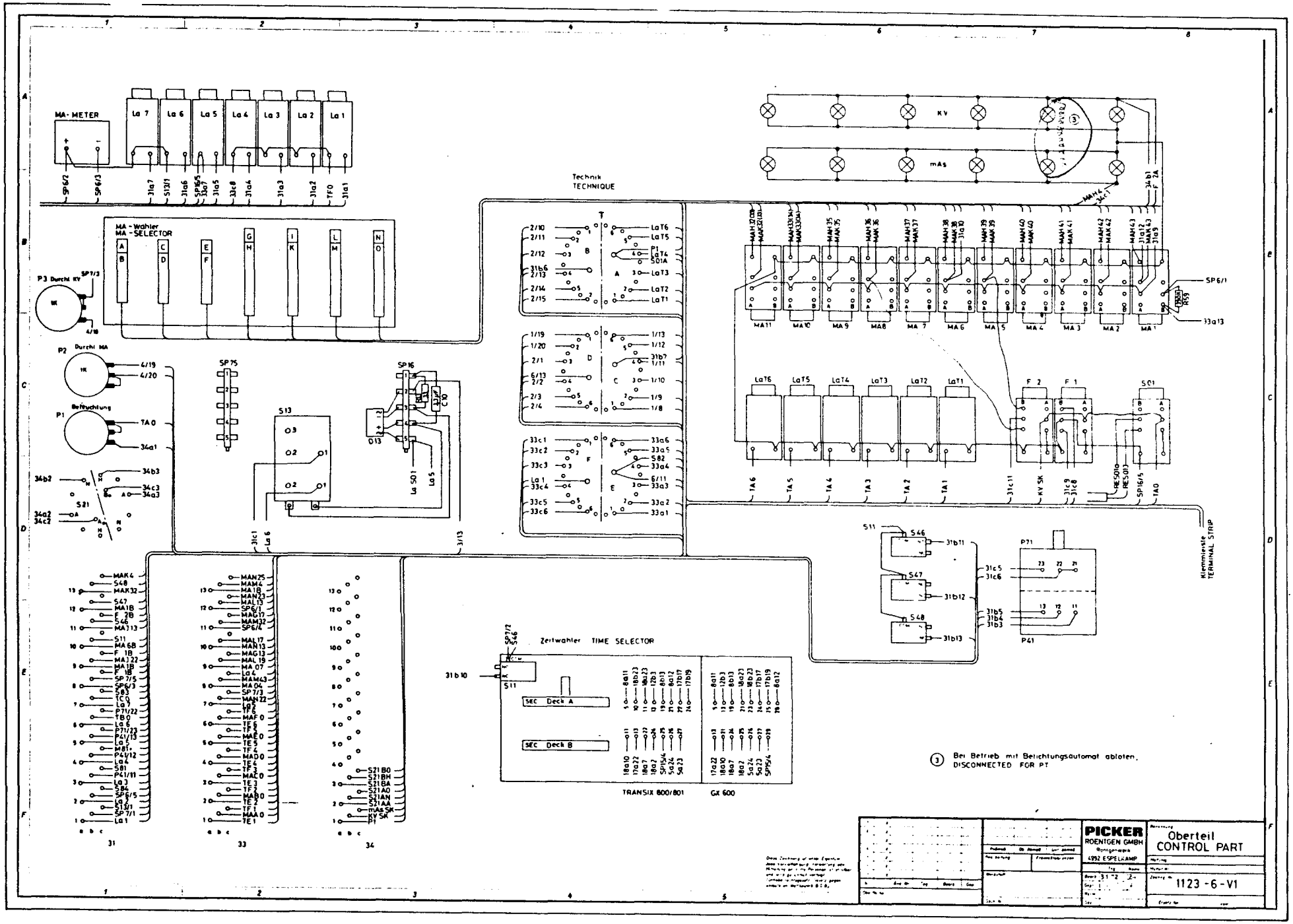
MA-METER
MA-Wahler
MA-SELECTOR
Technik
TECHNIQUE
Zeitwahler TIME SELECTOR
SEC Deck A
SEC Deck B
TRANSIX 800/801
GX 600
Klemmleiste
TERMINAL STRIP
Bei Betrieb mit Belichtungsautomat abloten,
DISCONNECTED FOR PT
PICKER
ROENTGEN GMBH
Rontgenwerk
4992 ESPELKAMP
Oberteil
CONTROL PART
1123-6-V1

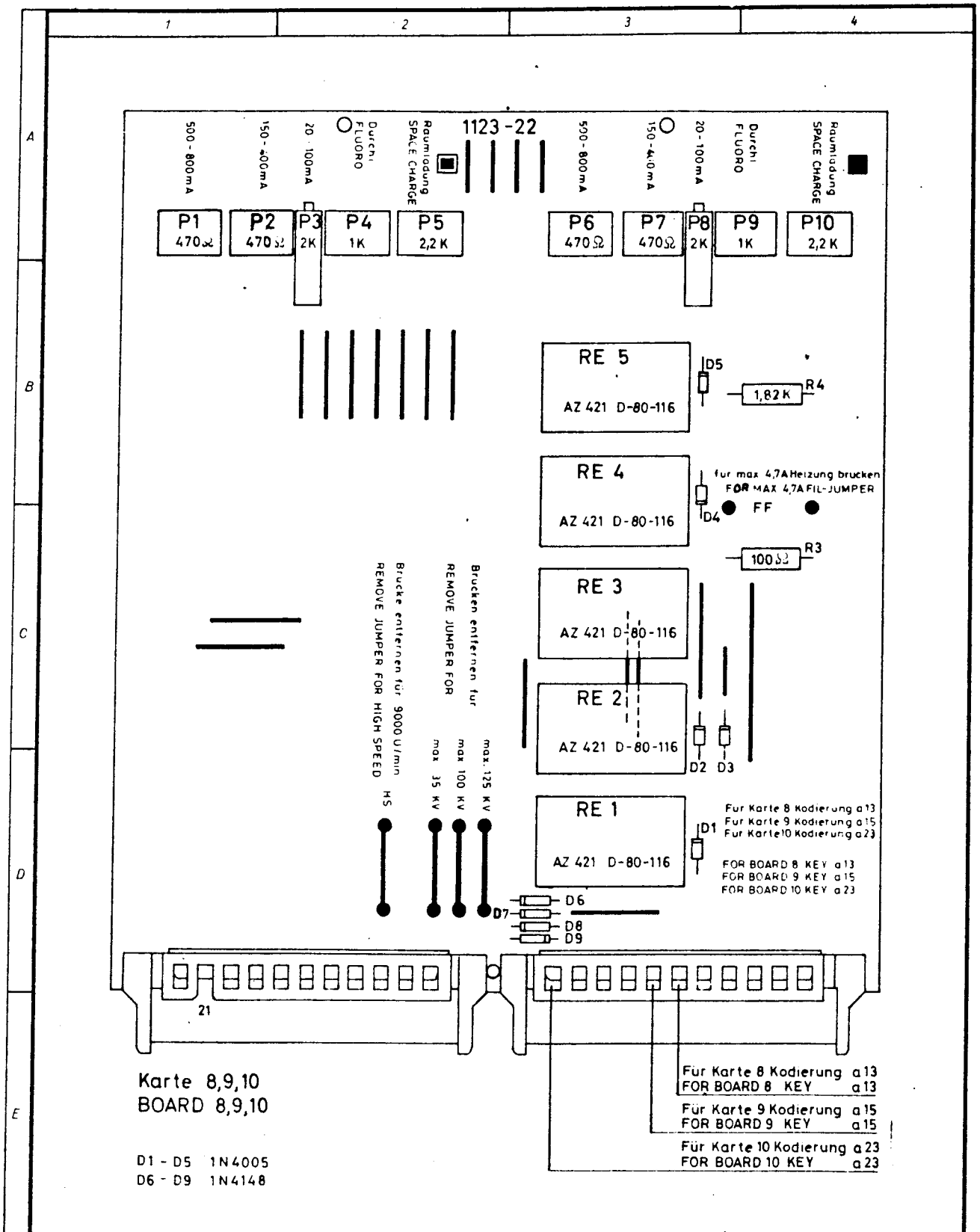

7	X				
6	X				
5	X				
4	X				
3	X				
2	X				
1	X				
Nr		Änd.-Nr	Tag	Bearb	Gepr

Obe[illegible]

Paßmaß | Ob Abmaß | Unt Abmaß

Bearbeitung | Freimaßtoleranzen

Werkstoff

Sach.-Nr

PICKER
ROENTGEN GMBH
Rontgenwerk
4992 ESPELKAMP

	Tag	Name
Bearb	20 9 71	[illegible]
Gepr		
Norm		
Ges		

Benennung
Röhrenkarte
TUBE PCB

Maßstab 1:1

Modell-Nr

Zeichng.-Nr 1883 1123 - 22

Ersatz für vom

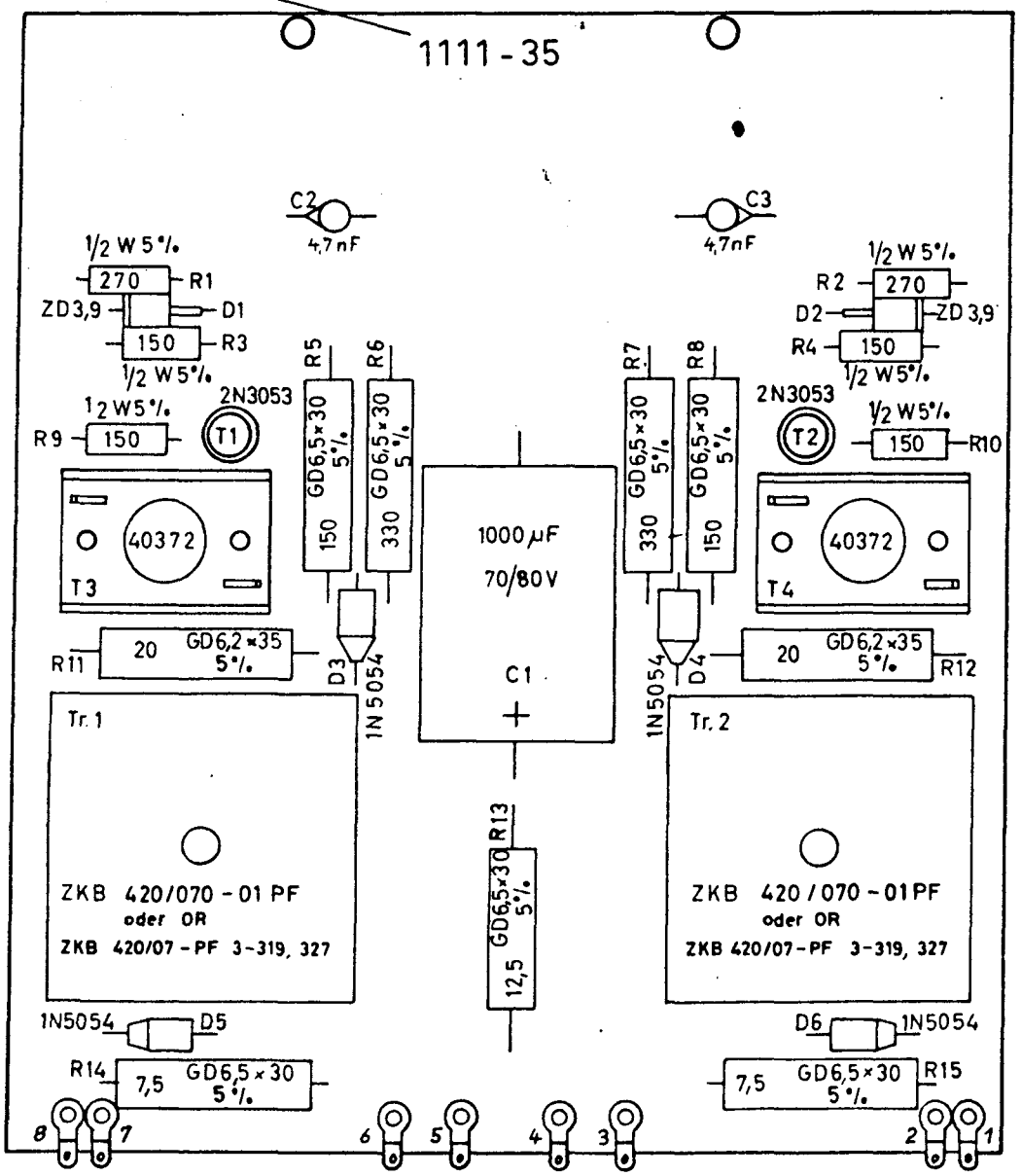

Karte 25
BOARD 25

Bei Änderungen 15-SK-524 beachten

1	6064	3 70		
Zeichn. Nr.	Änd. Nr.	Tag	Bearb. Name	Gepr.

Diese Zeichnung ist unser Eigentum, jede Vervielfältigung, Verwertung oder Mitteilung an dritte Personen ist strafbar und wird gerichtlich verfolgt. (Urheberrechtsgesetz, Gesetz gegen unlauteren Wettbewerb B.G.B.)

bearb. [signature] am 23.9.67 gepr.

PICKER
GMBH
ESPELKAMP

Benennung
Impulsübertrager
IMPULSTRANSFORMER

Zeichng. Nr.
08762 1111-35

Ersatz vom

Zeichn.-Nr. weiß aufgedruckt

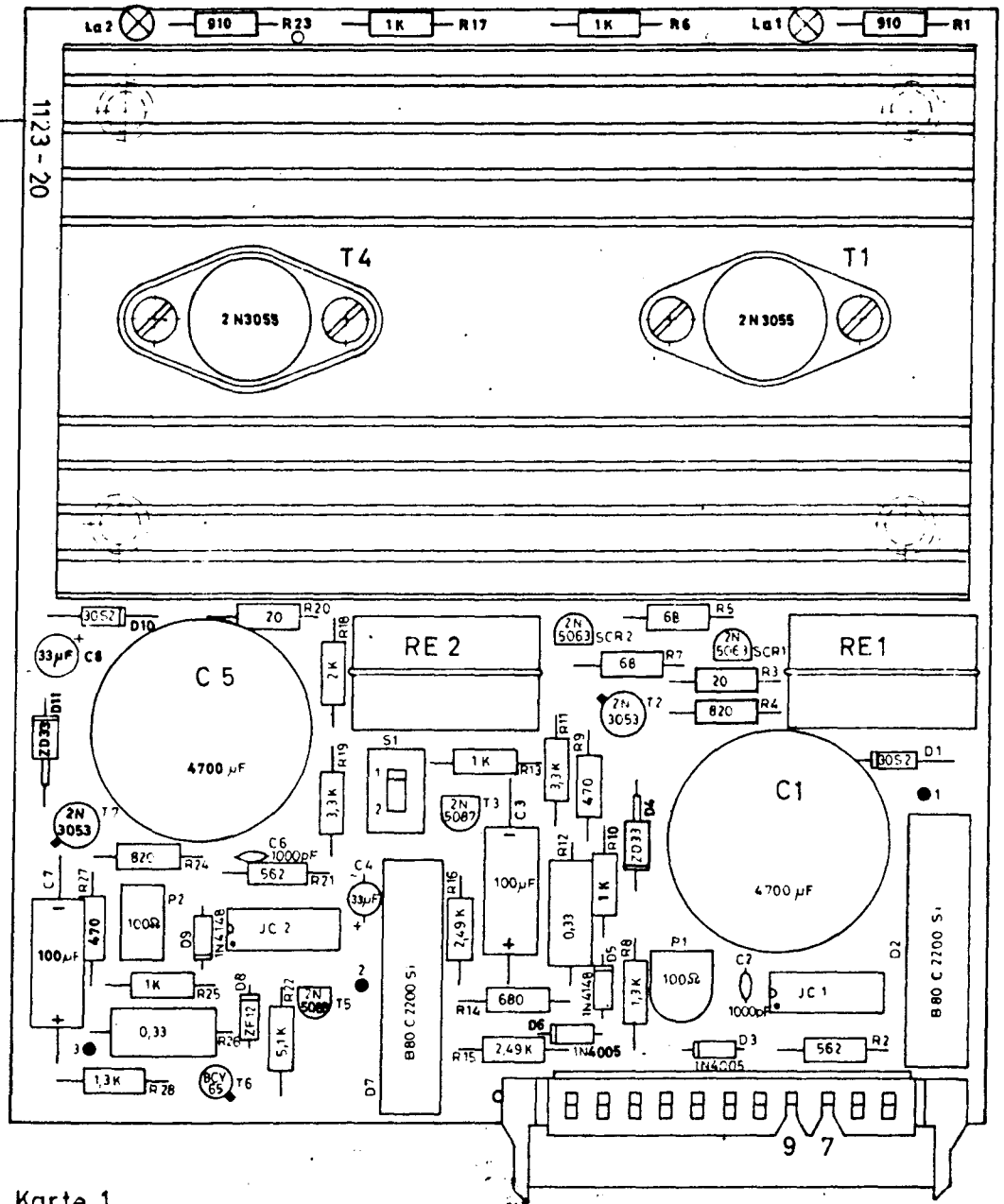

Karte 1
BOARD 1

Transistoren T1 und T4 mit Silikonpaste eingesetzt ! (Transistoren und Kuhlkörper mit Paste eingestrichen.)
T1 ohne Glimmerscheibe

Nr		Änd.-Nr.	Tag	Bearb	Gepr
7	X				
6	X				
5	X				
4	X				
3	X				
2	X				
1	X	34.20	11.8.72	Kunze	

Oberfläche

Paßmaß | Ob. Abmaß | Unt. Abmaß
Bearbeitung | Freimaßtoleranzen
Werkstoff
Sach.-Nr

PICKER
ROENTGEN GMBH
Röntgenwerk
4992 ESPELKAMP

	Tag	Name
Bearb	3.2.72	Kunze
Gepr		
Norm		
Ges		

Benennung
24V Versorgung
24V POWER SUPPLY

Maßstab 1 : 1
Modell-Nr
Zeichng.-Nr. 1949 / 1123 - 20
Ersatz für vom

Diese Zeichnung ist unser Eigentum. Jede Vervielfältigung, Verwendung oder Mitteilung an dritte Person ist strafbar und wird gerichtlich verfolgt (Urheberrechtsgesetz, Gesetz gegen unlauteren Wettbewerb B.G.B.)

Zeichnungsnummer weiß aufgedruckt

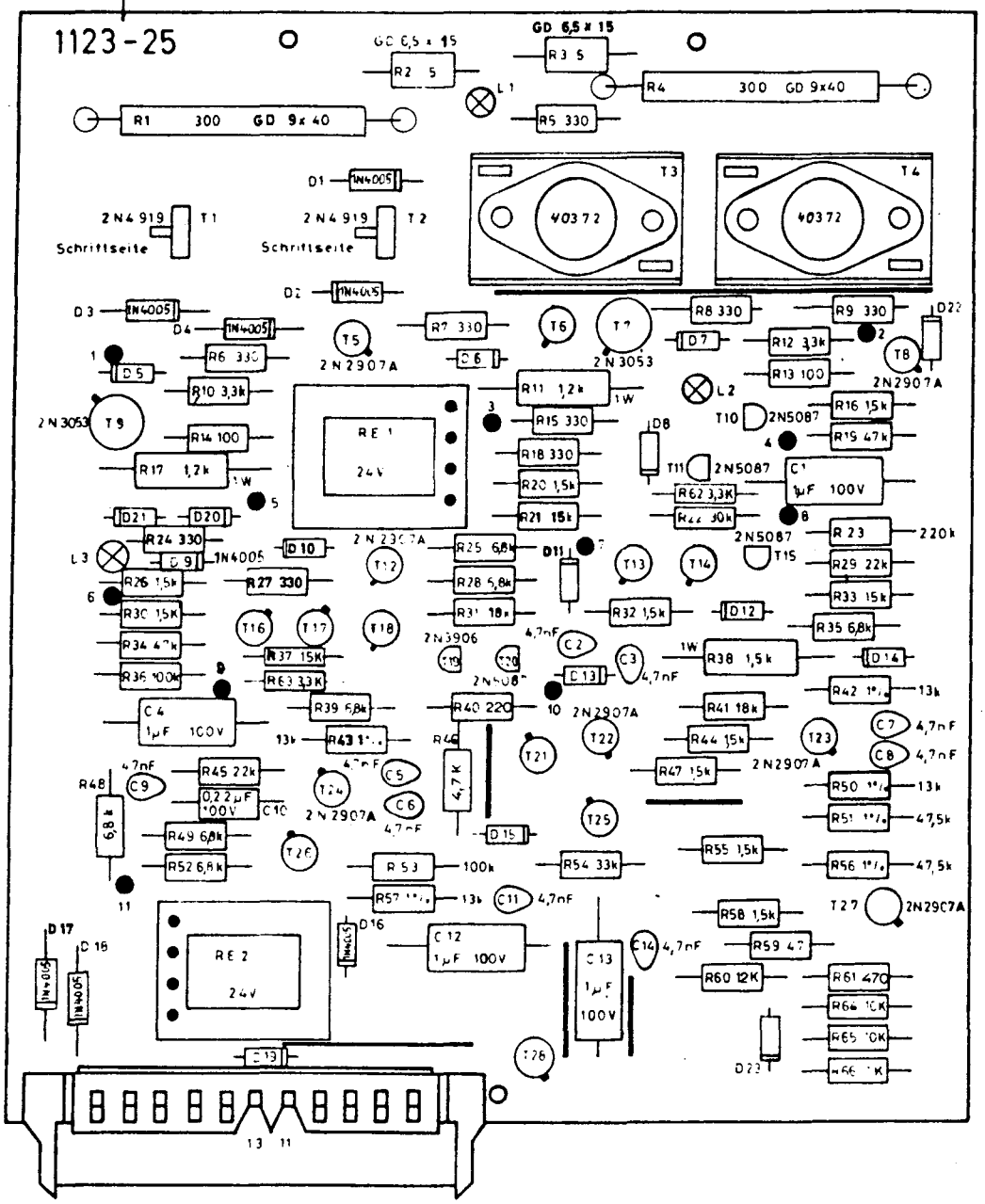

Karte 14

BOARD 14

BCY 65

1N 4148

Bei Änderung 11-SK-522 beachten!

Lfd Nr	And Nr	Tag	Bearb Name	Gepr
6				
5				
4				
3				
2				
1				

Diese Zeichnung ist unser Eigentum und Verwendung oder Mitteilung an dritte Personen ist strafbar und wird gerichtlich verfolgt (Urheberrechtsgesetz, Gesetz gegen unlauteren Wettbewerb B.G.B.)

Gezeichnet Kunze am 14.1.72 gepr. Nicker

PICKER
GMBH
ESPELKAMP

Benennung
mA-Wähler
MA-SELECTOR DRIVE

Teilfolg Nr
1902 / 1123 - 25

vom

Zeichnungsnummer weiß aufgedruckt

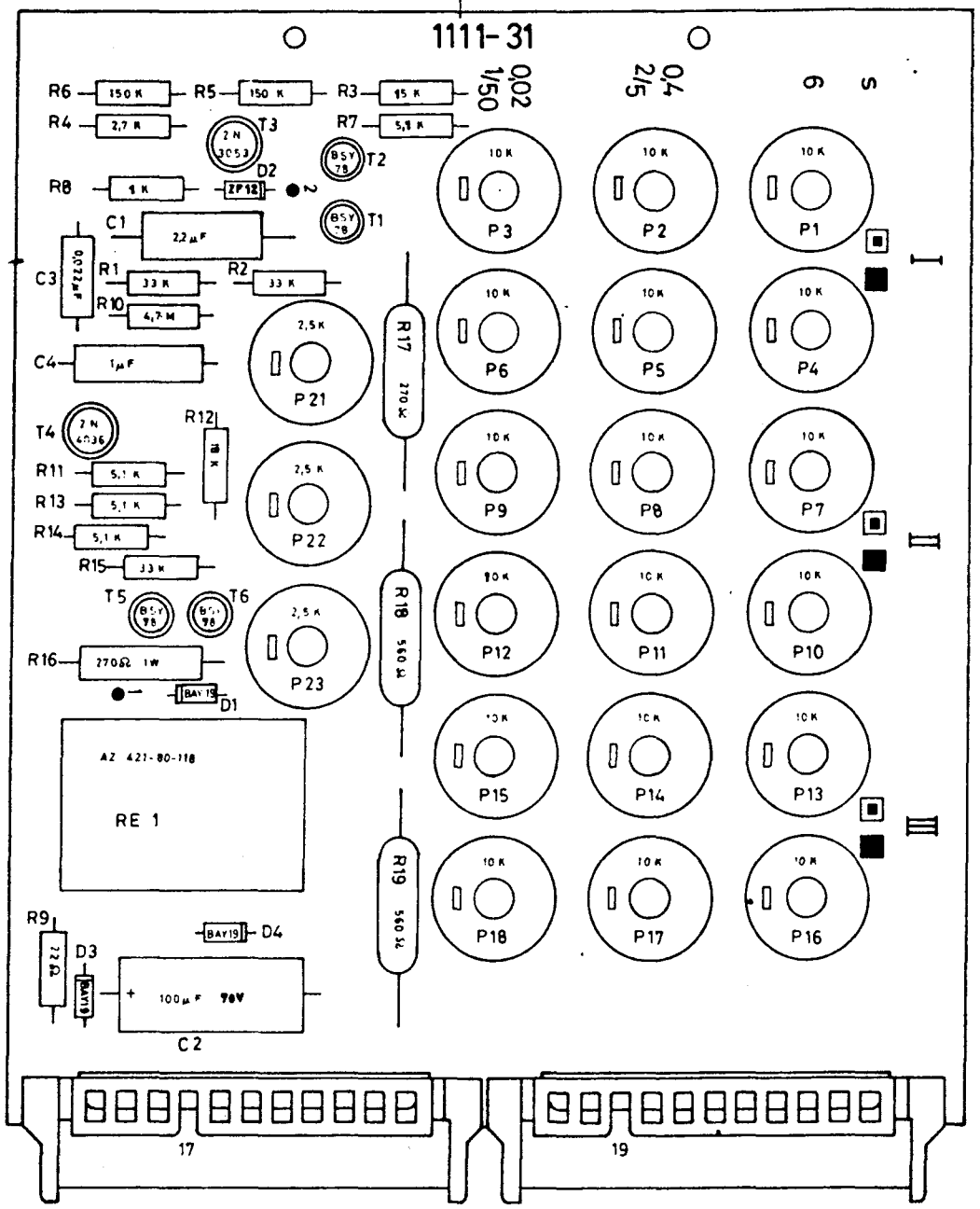

Karte 13
BOARD 13

Achtung!
① Bedruckte Seiten der Winkelsteckfassung für RE 1 mit Isolierplatten Pos. 36 und 37 mit UL-Kleber (Pliobond) Pos 38 abgeklebt!

Lfd Nr	And Nr	Tag	Beart	Name
6				
5				
4				
3				
2				
1	7066	29.10.70	Kunze	

Diese Zeichnung ist unser Eigentum. Jede Vervielfältigung, Verwertung oder Mitteilung an Dritte Personen ist strafbar und wird gerichtlich verfolgt. Urheberrechtsgesetz gegen unlauteren Wettbewerb BGB

bearb. Kunze am 23.5.69 gepr.

PICKER
GMBH
ESPELKAMP

Benennung
Potentiometerkarte
POTENTIOMETER BOARD

Zeichnung Nr.
08766/ 1111 - 31

vom

Zeichnungsnummer weiß aufgedruckt

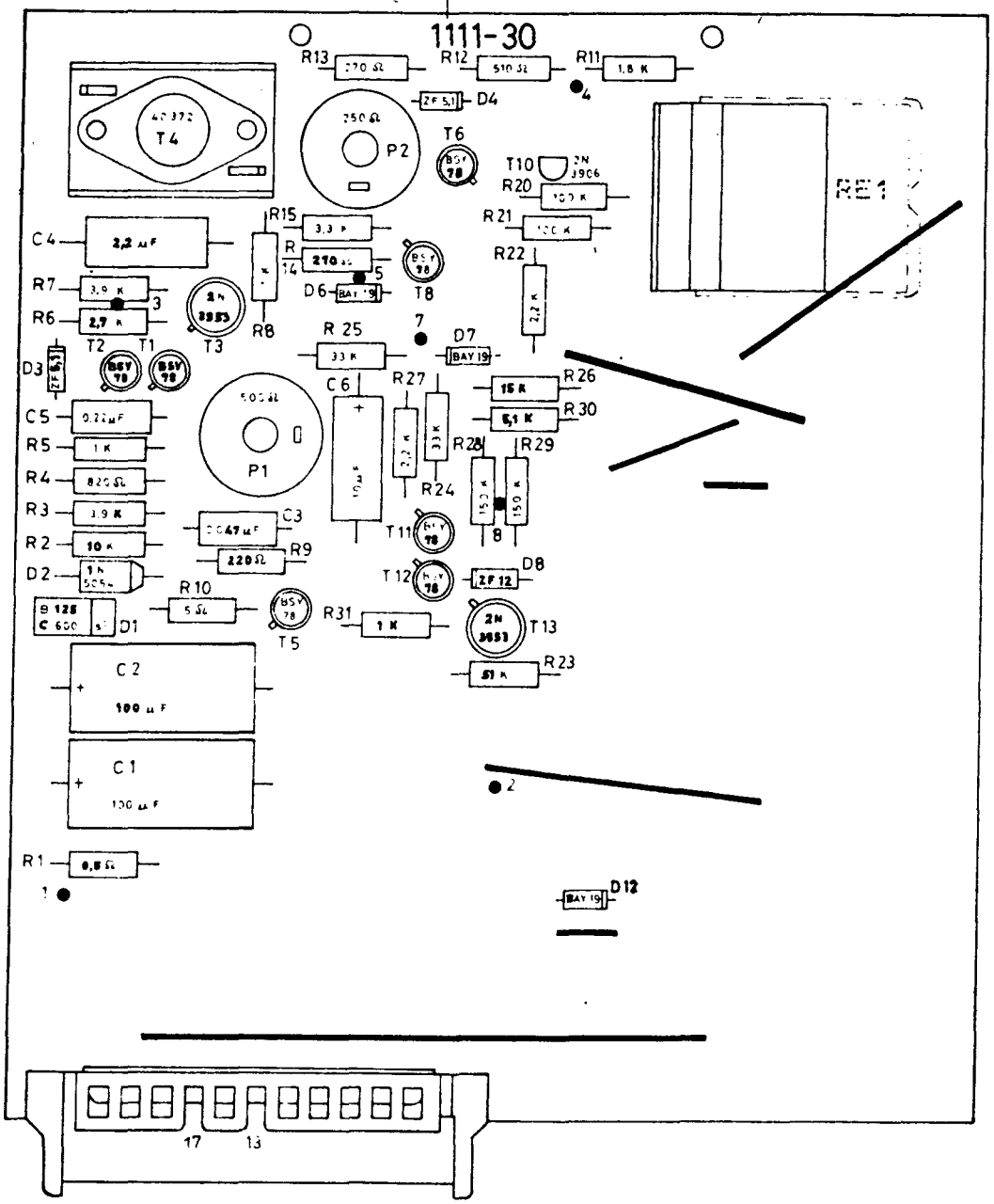

Karte 12
BOARD 12

(2) Achtung!
Bedruckte Seiten der Winkelsteckfassung für RE1 mit Isolierplatten Pos 46 und 47 mit UL-Kleber (Pliobond) Pos 48 abgeklebt!

		6				
		5				
		4	7.50	16.9.71	[illegible]	
		3	7450	15.4.71	[illegible]	
Paßmaß	Abmaß	2	7067	29.10.70	[illegible]	
Oberfläche		1	6503	9.9.70	[illegible]	
		Lfd. Nr.	Änd.-Nr.	Tag	Bearb.	Gepr. Name

Freimaß-Toleranzen:

Maßstab: 1:1

Werkstoff:

PICKER GMBH
Werk für Röntgentechnik und Elektronik
ESPELKAMP

Überlastschutz-karte
TUBE LIMIT BOARD

Diese Zeichnung ist unser Eigentum. Jede Vervielfältigung, Verwertung oder Mitteilung an dritte Personen ist strafbar und wird gerichtlich verfolgt (Urheberrechtsgesetz, Gesetz gegen unlauteren Wettbewerb, B. G. B.)

	Tag	Name
Bearb.	9.9.70	[illegible]
Gepr.		
Normgepr.		
Ges.		[illegible]

Modell Nr.:

08767 1111 - 30

(1) Ersatz für [illegible] 30 vom 16.10.69

Bearbeitung:

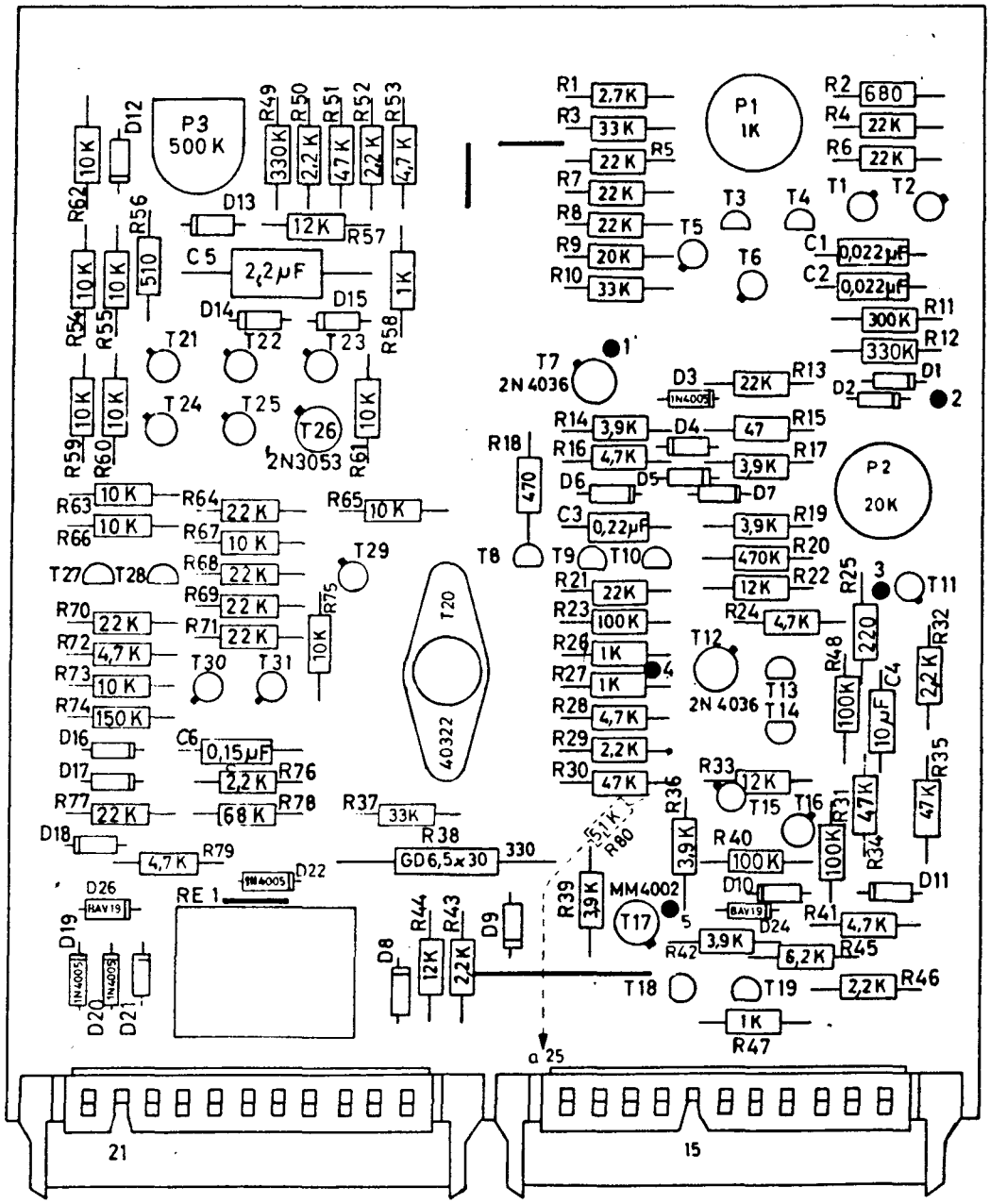

Karte 19
BOARD 19

1N 4148

BSY 78 oder BCY 65 E VII
or BCY 65 E VII

2N 5087

Lfd Nr	And-Nr	Tag	Bearb. Name	Gepr.
1	9872	24.5.72	Kemre	

24.5.72

PICKER
GMBH
ESPELKAMP

Überstrom-
Erfassungskarte
CIRCUIT BREAKER

Zeichnung Nr
08763/ 1111 - 34

1111 - 34 vom 2.2.70

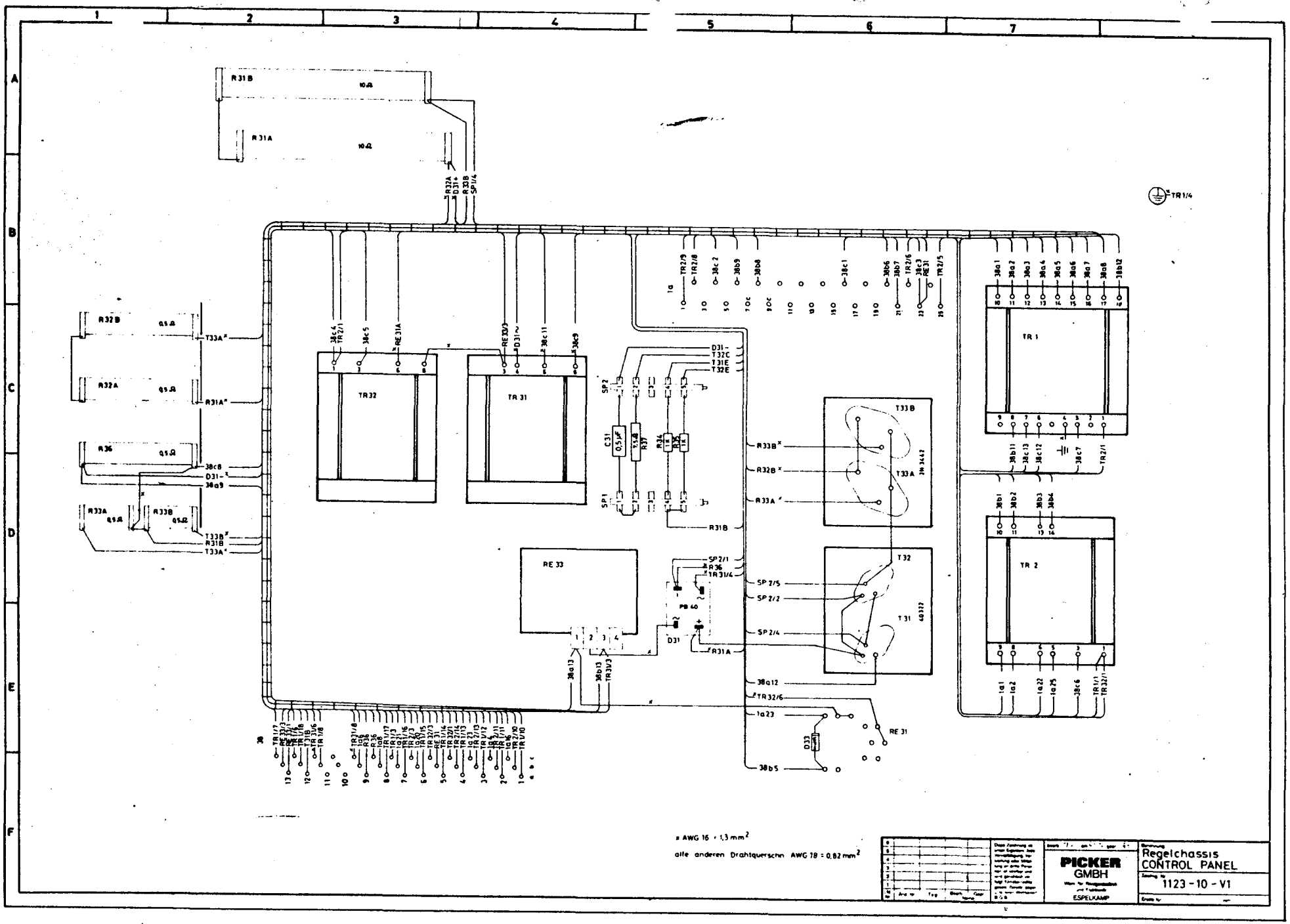

R31B
R31A
R32B
R32A
R36
R33A
R33B
TR32
TR31
RE33
TR1
TR2
T33B
T33A
T32
T31
2N 3442
40322
PB 40
D31
D33
RE31
TR1/4
x AWG 16 = 1,3 mm²
alle anderen Drahtquerschn AWG 18 = 0,82 mm²
PICKER
GMBH
ESPELKAMP
Regelchassis
CONTROL PANEL
1123 - 10 - V1

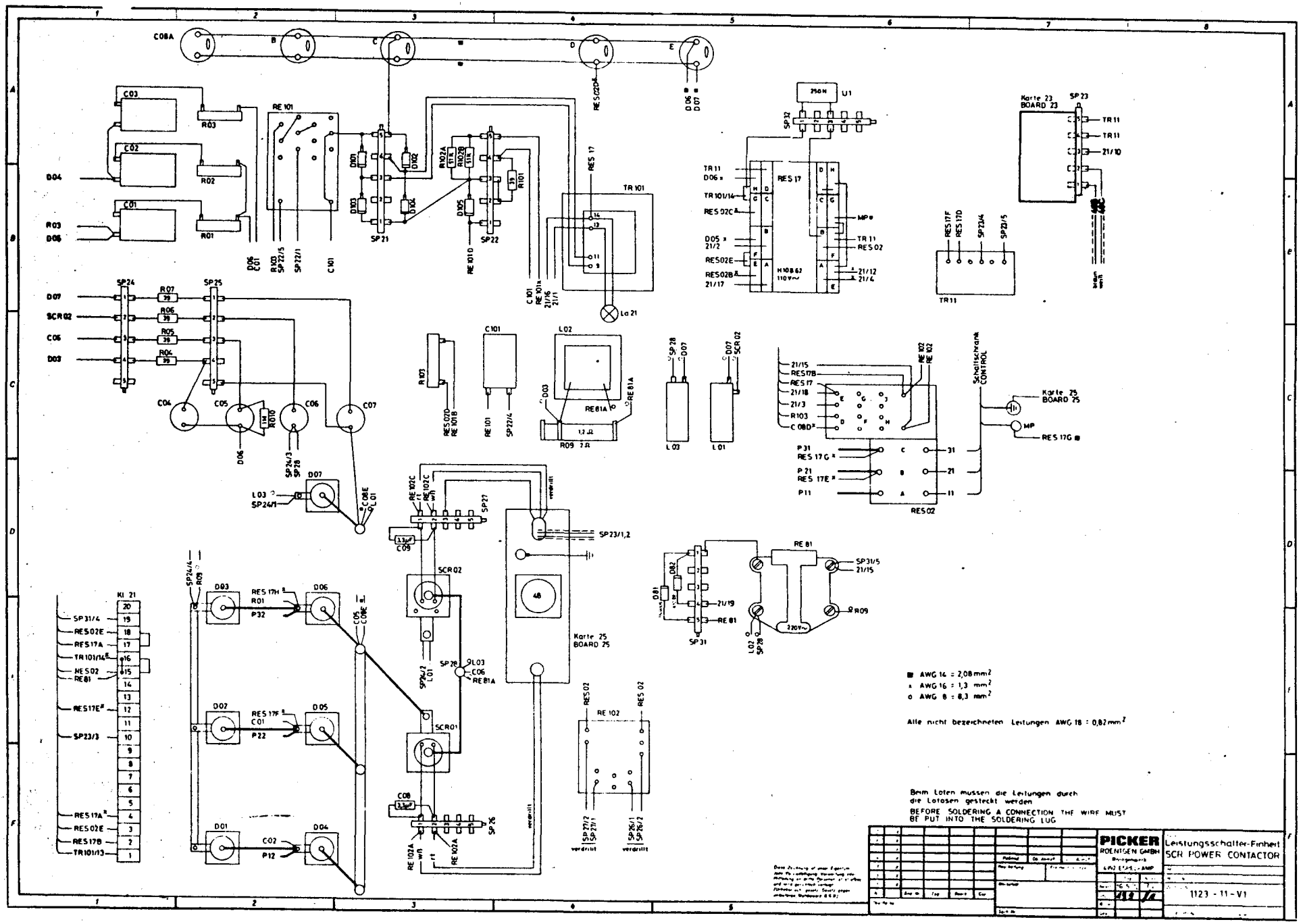

■ AWG 14 = 2,08 mm²
x AWG 16 = 1,3 mm²
o AWG 8 = 8,3 mm²

Alle nicht bezeichneten Leitungen AWG 18 = 0,82 mm²

Beim Loten mussen die Leitungen durch die Lotosen gesteckt werden

BEFORE SOLDERING A CONNECTION THE WIRE MUST BE PUT INTO THE SOLDERING LUG

PICKER
ROENTGEN GMBH
Röntgenwerk
4192 ESPEL-AMP

Leistungsschalter-Einheit
SCR POWER CONTACTOR

1123 - 11 - V1

Röhren - Liste TUBE LIST GX 600, Transix 800/801

Type	Stator Hz	Focus mm²	Brücke JUMPER FF	KV max.	Überlastschutz Eichwerte TUBE LIMIT DEVICE CALIBRATION 6 sec. mA	6 sec. KV	0,4 sec. mA	0,4 sec. KV	0,02 sec. mA	0,02 sec. KV
DYNAMAX " 50 "	60	0,5			50	50	50	104	100	80
DYNAMAX " 50 "	60	0,7			50	84	100	84	100	117
DYNAMAX " 50 " -	60	1,0			100	72	250	70	250	106
DYNAMAX " 50 "	60	1,5			150	60	250	100	600	71
DYNAMAX " 50 " -	60	2,0			200	60	400	88	600	92
DYNAMAX " 50 " -	180	2,0			200	77	600	90	600	110+
DYNAMAX " 50 "	180	1,5			200	61	300	130	600	121
DYNAMAX " 50 " -	180	1,0			200	54	200	138	600	77
DYNAMAX " 50 "	180	0,7			100	58	150	90	150	130
DYNAMAX " 50 "	180	0,5			50	75	100	87	150	90
DYNAMAX " 60 "	50	0,6			75	72	100	110	200	69
DYNAMAX " 60 "	50	1,0			200	55	400	70	600	58
DYNAMAX " 60 "	50	2,0			200	90	600	91	600	116

+ instead of 0,02 sec. take 0,2 sec.

Röhren - Liste TUBE LIST GX 600, Transix 800/801

Type	Stator	Focus	Brücke JUMPER		Überlastschutz Eichwerte TUBE LIMIT DEVICE CALIBRATION					
					6 sec.		0,4 sec.		0,02 sec.	
	Hz	mm²	FF	KV max.	mA	KV	mA	KV	mA	KV
Dynamax " 60 "	180	2,0			400	58	600	146	max.	max.
DYNAMAX " 60 "	180	1,0			200	80	600	76	600	108
DYNAMAX " 60 "	180	0,6			100	90	200	95	200	125
DYNAMAX " 61 "	50	0,3	X		50	75	75	80	75	96
DYNAMAX " 61 "	50	1,0			200	70	400	90	600	88
DYNAMAX " 61 "	60	0,3			50	80	75	88	100	78
DYNAMAX " 61 "	60	1,0			200	70	400	98	600	97
DYNAMAX " 61 "	150	0,3			50	112	100	104	100	123
DYNAMAX " 61 "	150	1,0			200	80	600	100	600	150
DYNAMAX " 61 "	180	1,0			200	85	600	110	600	130+
DYNAMAX " 61 "	180	0,3	X		100	58	100	115	100	131
+ instead of 0,02 sec. take 0,2 sec.										

Röhren - Liste TUBE LIST GX 600, Transix 800/801

Type	Stator Hz	Focus mm²	Brücke JUMPER FF	Brücke JUMPER KV max.	Überlastschutz Eichwerte TUBE LIMIT DEVICE CALIBRATION 6 sec. mA	6 sec. KV	0,4 sec. mA	0,4 sec. KV	0,02 sec. mA	0,02 sec. KV
DX 10	50	0,6			75	96	150	79	150	98
DX 10	50	1,0			100	110	300	90	300	118
DX 10	50	2,0			200	80	600	76	600	110
DX 10	150	0,6			100	90	200	93	200	120
DX 10	150	1,0			200	75	600	71	600	102
DX 10	150	2,0			200	105	600	121	600	142+
DURATRON 200 - 12	60	0,6			100	60	100	115	150	100
DURATRON 200 - 12	60	2,0			200	98	600	94	600	143
DURATRON 200 - 12	180	1,0			200	83	600	79	600	106
DURATRON 200 - 12	180	2,0			200	100	600	143	max.	max.
DURATION 200 - 12	180	0,6			100	86	150	120	250	100
+ instead of 0,02 sec. take 0,2 sec.										

Röhrenüberlastschutz - Eichtabelle

TUBE LIMIT DEVICE CALIBRATION LIST

		6 sec.		2 sec.		0,8 sec.		0,4 sec.		0,2 sec.		0,1 sec.		0,02 sec.		
		DESIRED SOLL	ACTUAL IST	DESIRED SOLL	ACTUAL IST	DESIRED SOLL	ACTUAL IST	DESIRED SOLL	ACTUAL IST	DESIRED SOLL	ACTUAL IST	DESIRED SOLL	ACTUAL IST	DESIRED SOLL	ACTUAL IST	
Röhre 1 TUBE 1	S. FOK.															MA
	kl. Fok.															KV
	kV															
	L. FOK.															MA
	gr. Fok.															KV
Röhre 2 TUBE 2	S. FOK															MA
	kl. Fok															KV
	kV															
	L. FOK															MA
	gr. Fok.															KV
Röhre 3 TUBE 3	S. FOK															MA
	kl. Fok.															KV
	kV															
	L. FOK.															MA
	gr. Fok.															KV

Datum: 25 11. 64
Bearb.: Link
Gepr.: R

Zeichn.-Nr.: 1109-12-T1

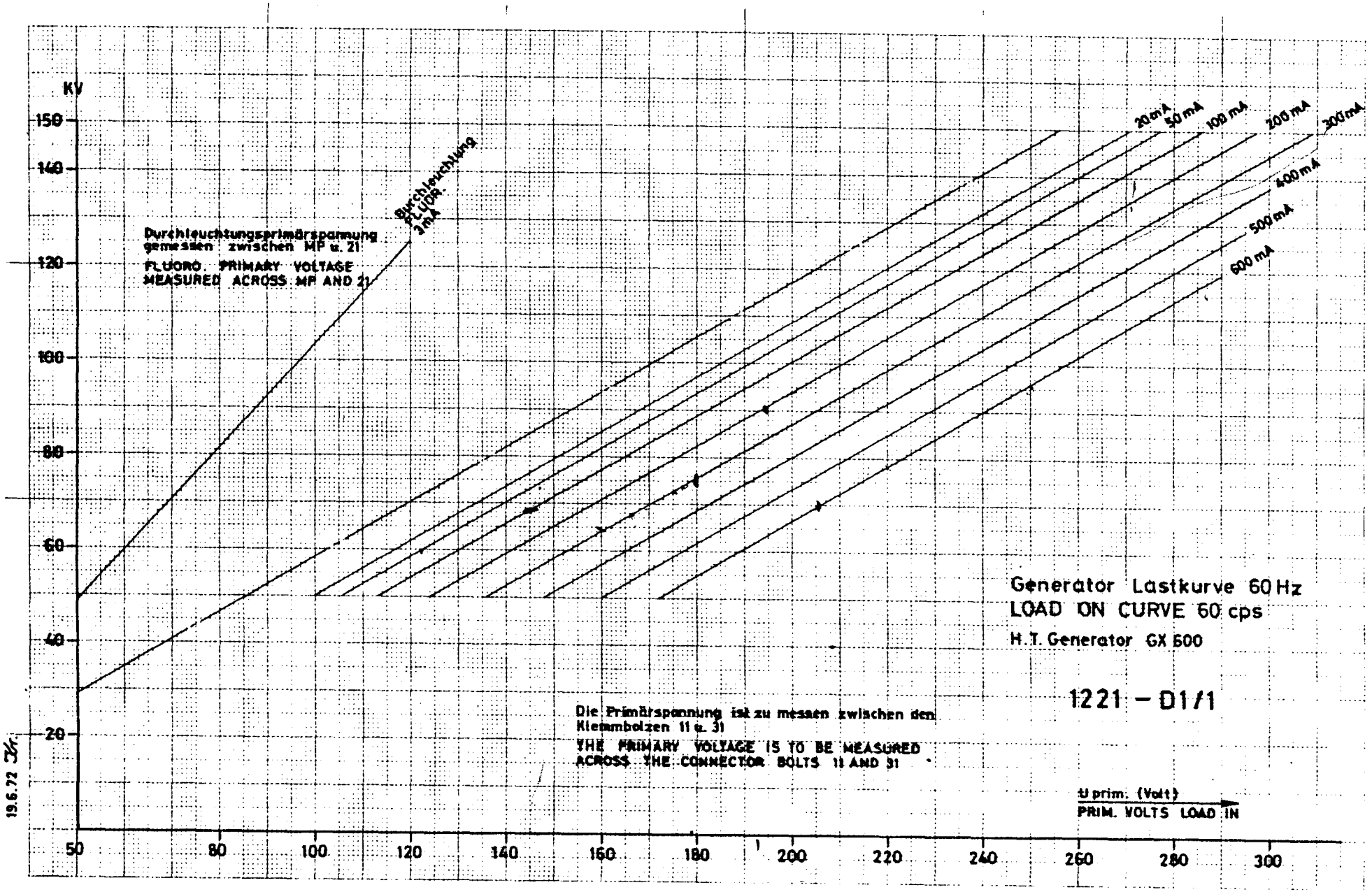
KV
150
140
120
100
80
60
40
20
50
80
100
120
140
160
180
200
220
240
260
280
300
Durchleuchtung FLUOR. 3mA
Durchleuchtungsprimärspannung gemessen zwischen MP u. 21
FLUORO. PRIMARY VOLTAGE MEASURED ACROSS MP AND 21
20 mA
50 mA
100 mA
200 mA
300 mA
400 mA
500 mA
600 mA
Generator Lastkurve 60 Hz
LOAD ON CURVE 60 cps
H.T. Generator GX 600
1221 – D1/1
Die Primärspannung ist zu messen zwischen den Klemmbolzen 11 u. 31
THE PRIMARY VOLTAGE IS TO BE MEASURED ACROSS THE CONNECTOR BOLTS 11 AND 31
U prim. (Volt)
PRIM. VOLTS LOAD IN
19.6.72

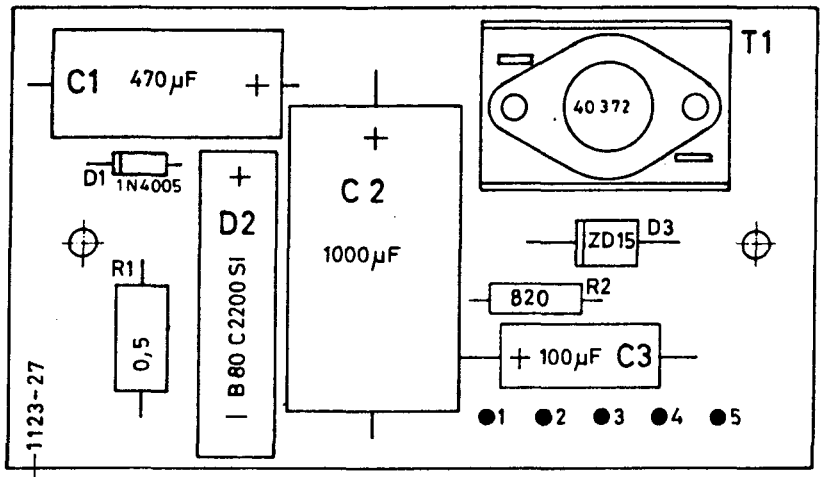

Zeichn.-Nr. weiß aufgedruckt

Karte 21
BOARD 21

Nr.	Änd.-Nr.	Tag	Bearb.	Gepr.
7	X			
	X			
5	X			
4	X			
3	X			
2	X			
1	X			

Paßmaß	Ob. Abmaß	Unt. Abmaß
Bearbeitung	Freimaßtoleranzen	
Werkstoff		

PICKER
ROENTGEN GMBH
Röntgenwerk
4992 ESPELKAMP

	Tag	Name
Bearb.	11.1.72	Kuna
Gepr.		
Norm		

Benennung
Versorgungskarte
25V AND 15V SUPPLY

Maßstab 1:1
Modell-Nr.
Zeichng.-Nr. 1123-27
1895/

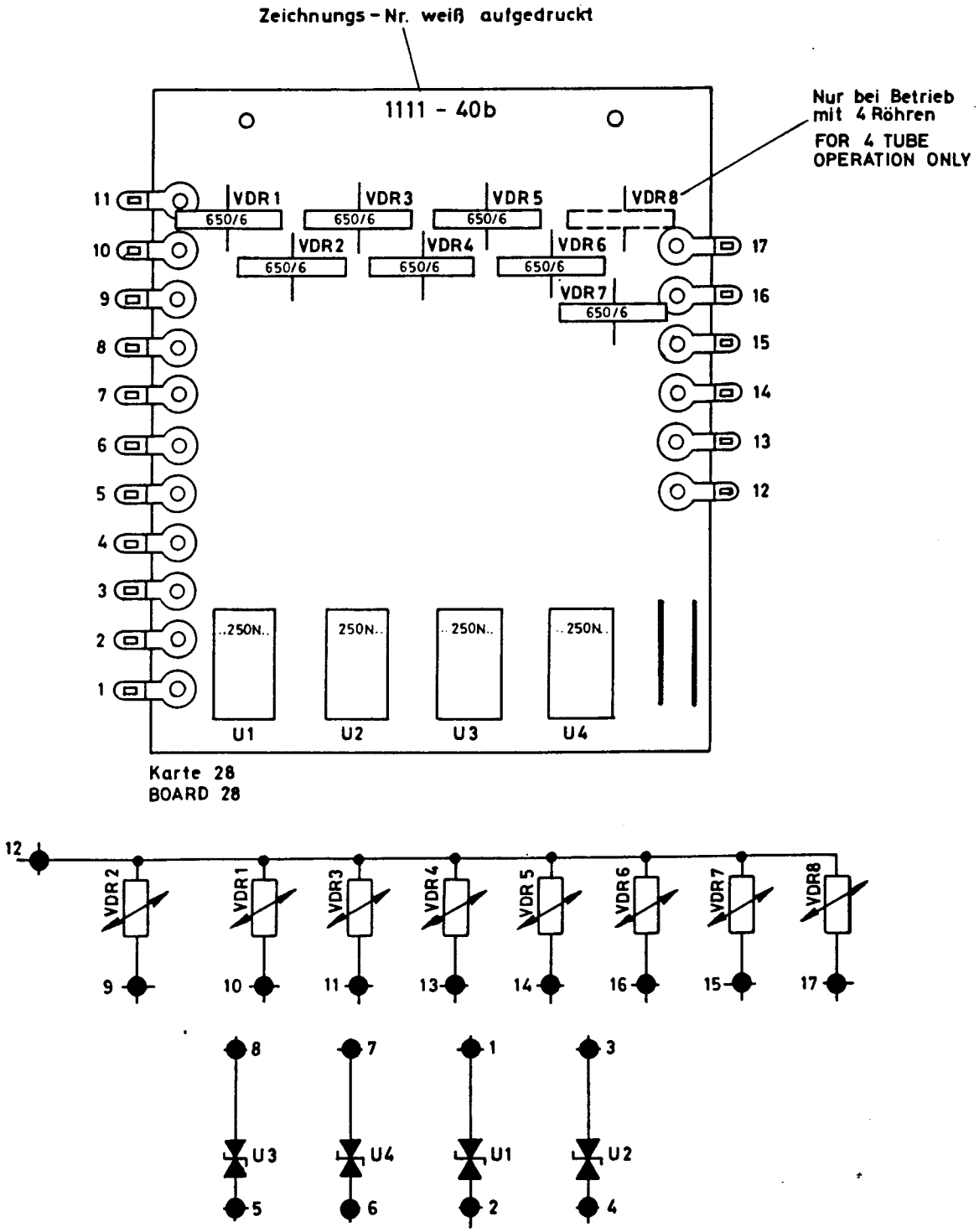

Nr.		Änd.-Nr.	Tag	Bearb.	Gepr.
7	X				
-	X				
	X				
4	X				
3	X				
2	X				
1	X				

Oberfläche

Paßmaß	Ob. Abmaß	Unt. Abmaß
Bearbeitung	Freimaßtoleranzen	

Werkstoff

PICKER
ROENTGEN GMBH
Röntgenwerk
4992 ESPELKAMP

	Tag	Name
Bearb.	6.5.71	Kr.
Gepr.	8.6.71	Kö
Norm		

Benennung
Entstörkarte
SURGE SURPRESSER
BOARD 60 Hz

Modell-Nr.

Zeichng.-Nr. 1686/1111-40b

...teren Welthewerb B.G.B.)

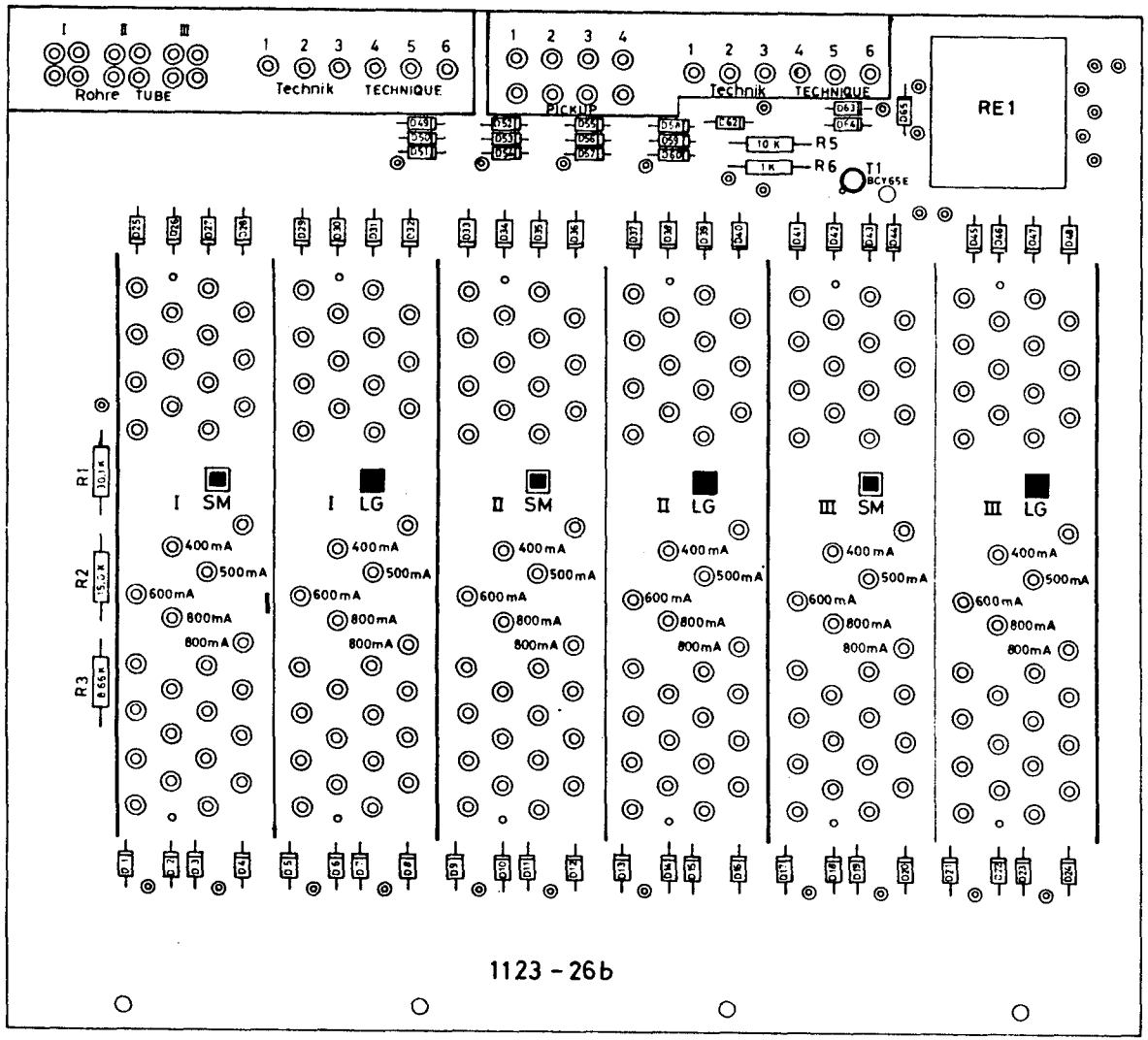

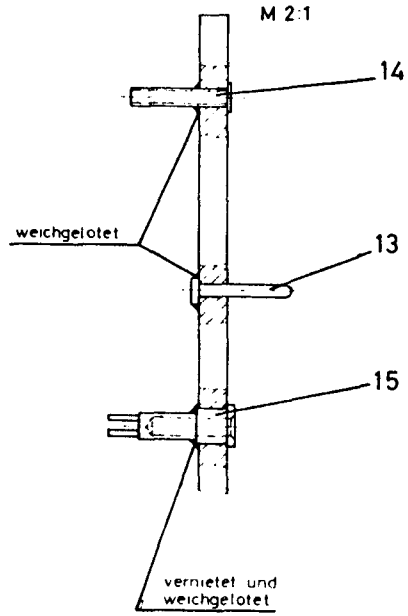

D1 bis D65 1N 4005

Zeichnungsnummer weiß aufgedruckt

Karte 30
BOARD 30

Nr		Änd. N	Tag	Bearb	Gepr
7	X				
6	X				
5	X				
4	X				
3	X				
2	X				
1	X				

Oberfläche

Paßmaß | Ub Abmaß | Unt Abmaß

Bearbeitung | Freimaßtoleranzen

Werkstoff

Sach Nr

PICKER
ROENTGEN GMBH
Röntgenwerk
4992 ESPELKAMP

1972	Tag	Name
Bearb	5 1	
Gepr	18.9.72	
Norm		
Gez		

Programmierkarte
PROGRAMMER
(GX 600)

Zeichng N 2010/ 1123-26b

Ersatz Nr

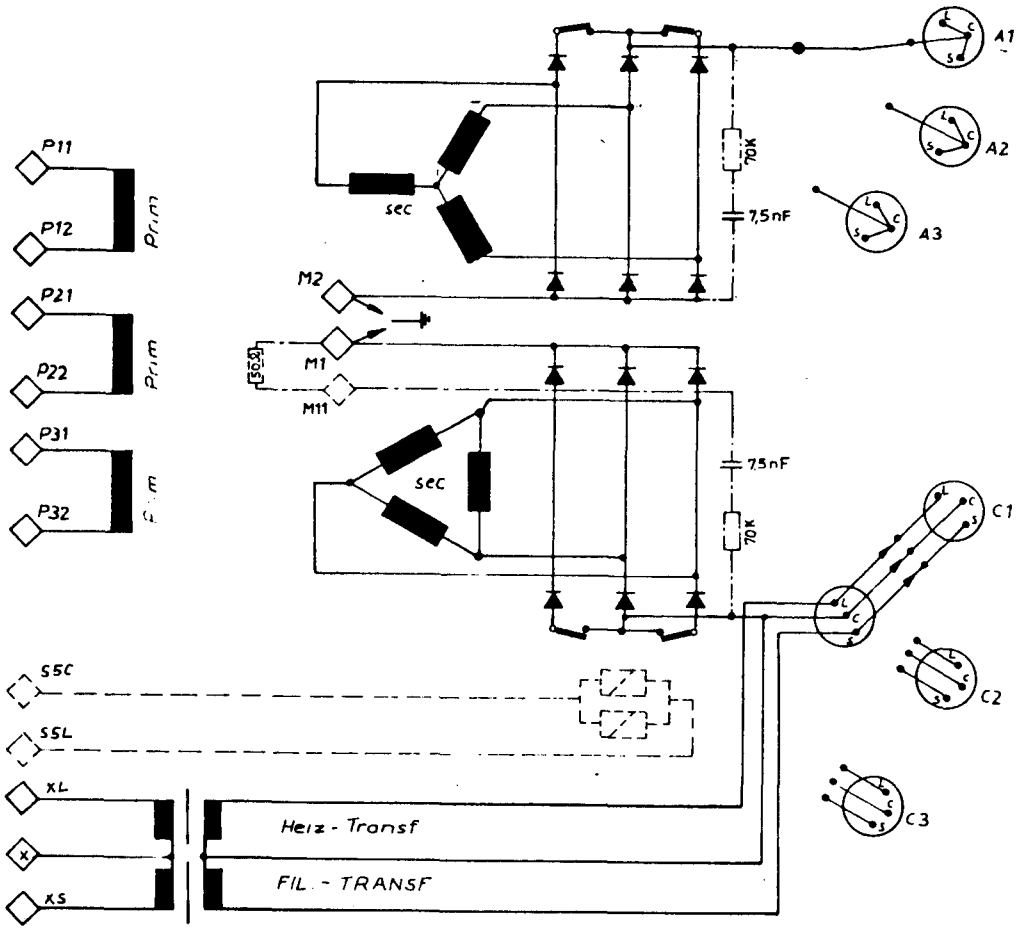

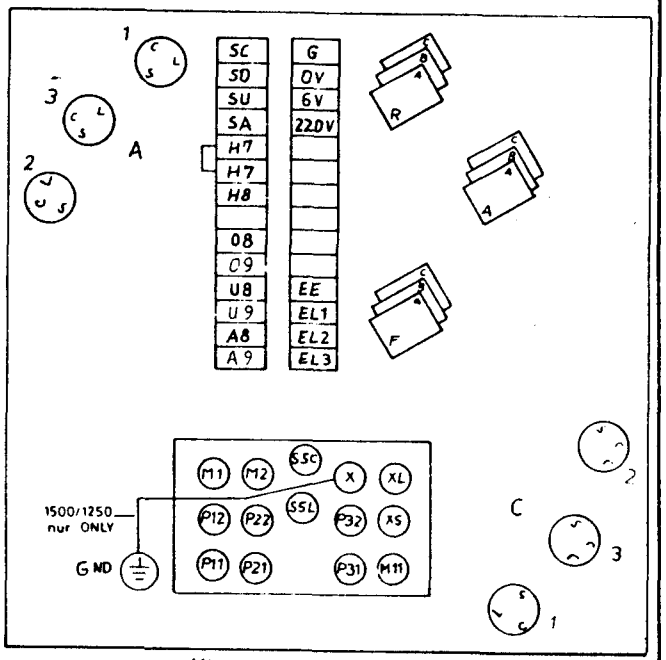

Klemmenanordnung
ARRANGEMENT OF TERMINALS

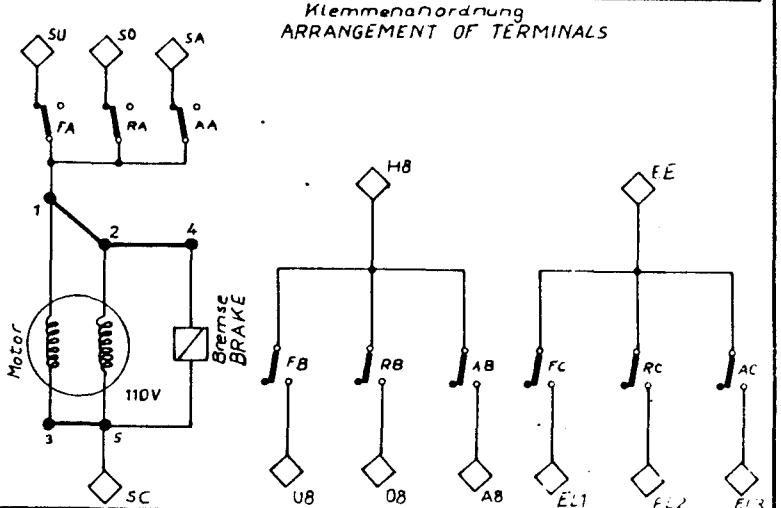

----- Nur für Halbwellenbetrieb
CINE 60fps OPERATION

—·—·— Nur für TRANSIX 1500/1250/1000
ONLY FOR PX 1500/1250/1250M

In Schalterstellung 1 werden Mikroschalter „F" betätigt (Untertischrohre)
In Schalterstellung 2 werden Mikroschalter „R" betätigt (Obertischrohre)
In Schalterstellung 3 werden Mikroschalter „A" betätigt (3. Rohre)

JACKET 1 „F" SWITCHES ACTIVATE (UNDER TABLE TUBE)
JACKET 2 „R" SWITCHES ACTIVATE (OVER TABLE TUBE)
JACKET 3 „A" SWITCHES ACTIVATE (3rd TUBE)

Lfd. Nr.	Änd. Nr.	Tag	Bearb. Name	Gepr.
6				
5				
4				
3				
2				
1				

Diese Zeichnung ist unser Eigentum. Jede Vervielfältigung, Verwertung oder Mitteilung an dritte Personen ist strafbar und wird gerichtlich verfolgt. Urheberrechtsgesetz. Gesetz gegen unlauteren Wettbewerb BGB

Kr am 19.5.72 gepr.

PICKER
GMBH
Werk für Röntgentechnik und Elektronik
ESPELKAMP

Hochsp. - Generator
H T - GENERATOR
TRANSIX 1500/1250/1000/800/801
PX 1500/1250/1250M/GX 600

Zeichng. Nr. 1215 - S1

Ersatz für

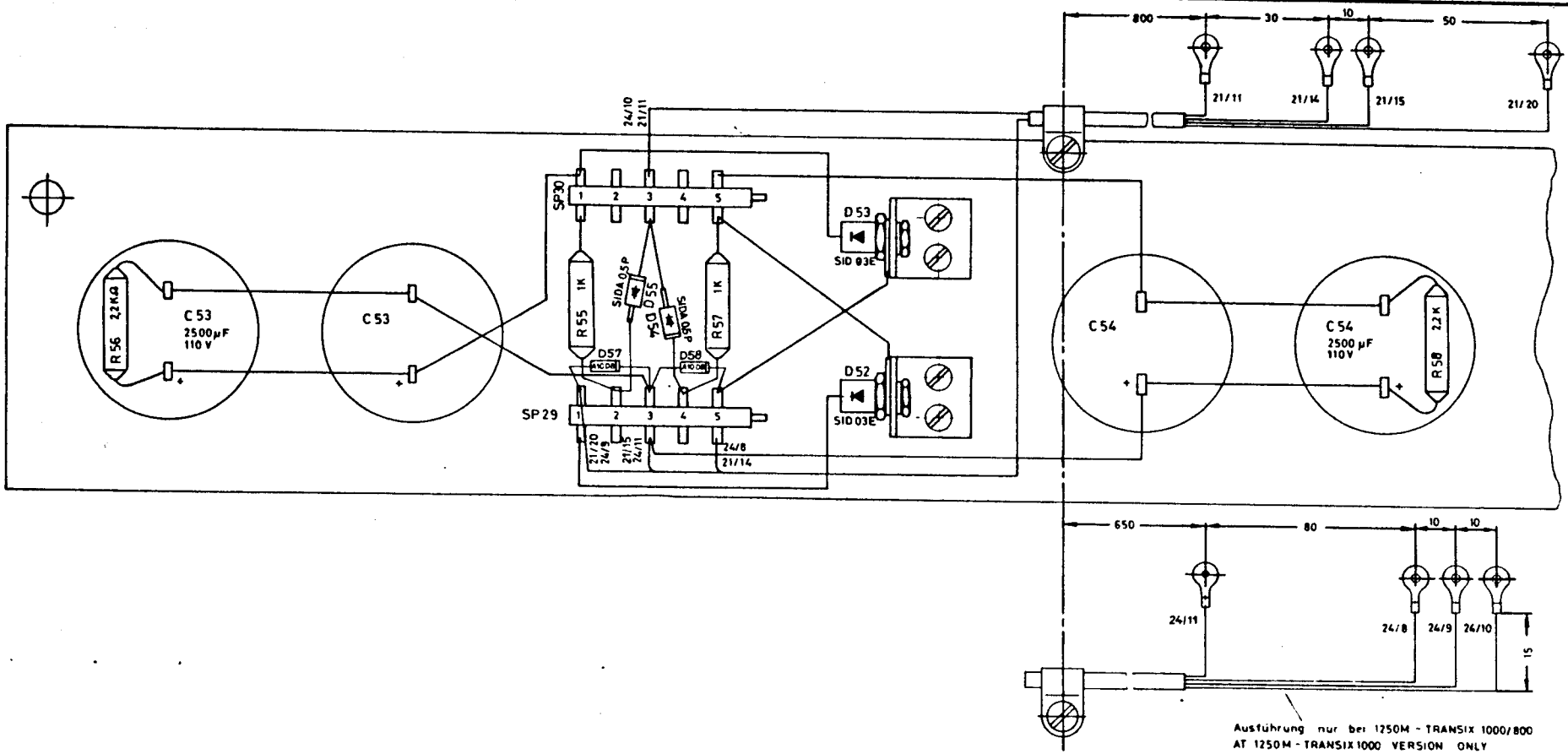

Beim Loten mussen die Leitungen durch die Lotosen gesteckt werden

BEFORE SOLDERING A CONNECTION THE WIRE MUST BE PUT INTO THE SOLDERING LUG

6					
5					
4					
3					
1	9228	28 4 72			

PICKER GMBH

Meßkreisschutz
MA METER-PROTECTION
PX 1500, PX 1250 (M) GX 600
TRANSIX 1000/800/801

28 4 72

1111 - 11 - V3/1

1111 11 V3

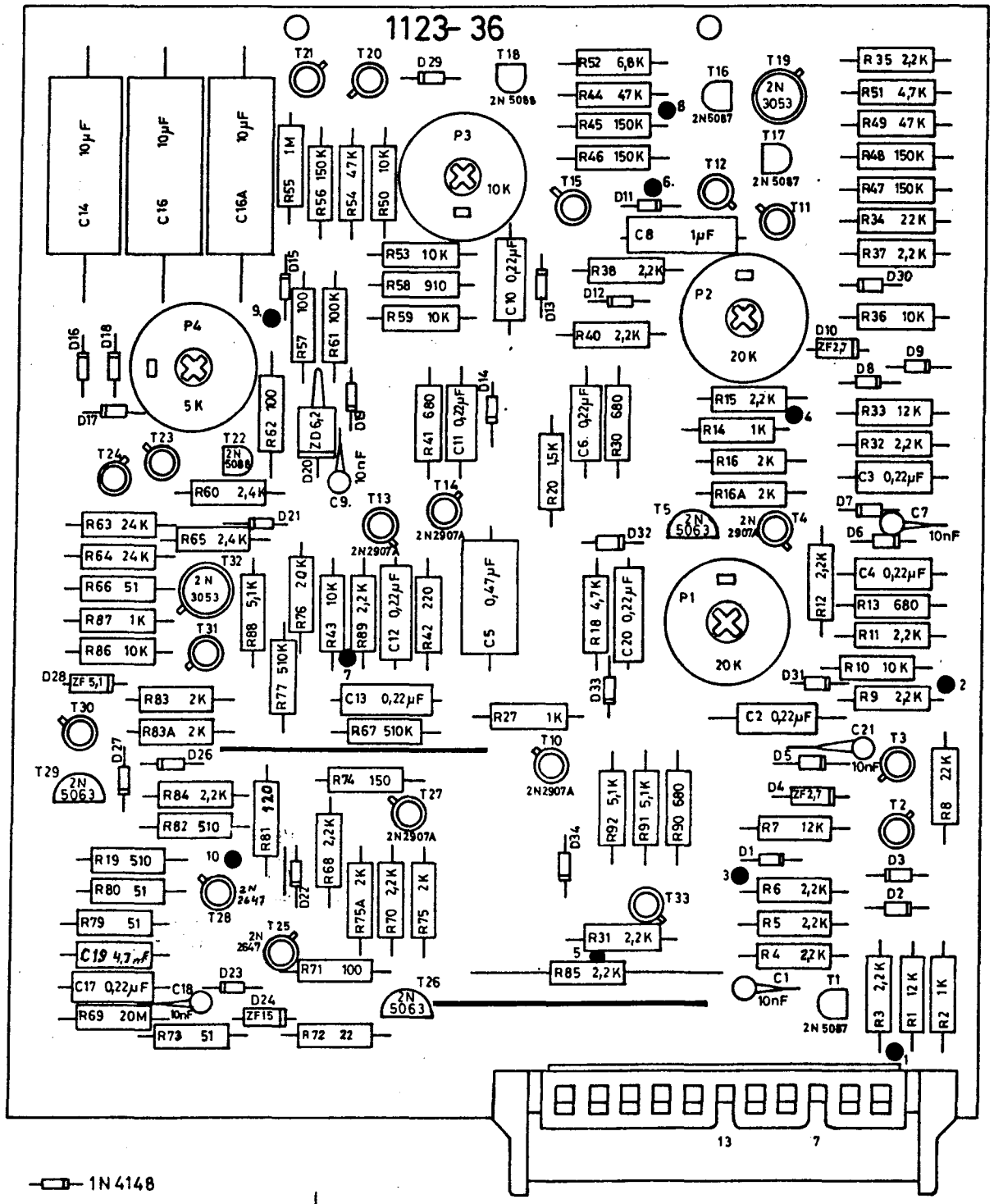

1N4148

BCY 65

Karte 5
BOARD 5

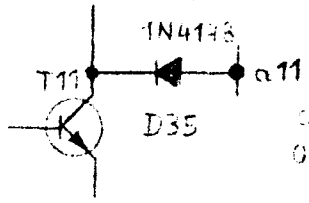

Nur für GX600 u. TRANSIX 601 (Karte wird ersetzt durch 1123-39)

6				
5				
4				
3				
2				
1	9481	21.8.72	Kunze	
Lfd			Bearb.	Gepr.

Diese Zeichnung ist unser Eigentum. Jede Vervielfältigung, Verwertung oder Mitteilung an dritte Personen ist strafbar und wird gerichtlich verfolgt (Urheberrechtsgesetz, Gesetz gegen unlauteren Wettbewerb

bearb.: Kunze am 11.2.72 gepr.:

PICKER
GMBH
Werk für Röntgentechnik und Elektronik

Benennung
Timer

Zeichng.-Nr. 19481
1123-36

595 MINER ROAD
CLEVELAND, OHIO 44143

T.S.G. No. 259

TO: District & Zone Service Managers
FROM: J. E. Kemp - Technical Support Group
DATE: February 20, 1973
SUBJECT: 3791 H.S. Accelerator Voltage Requirements for 180 Hertz

cc: E. R. Jones
G. Deutsch
R. Witucki
A. Furbee, Dunlee
DRS G-257
G. Patser - T55-651 (PG257:1)
G. O'Connor, CMED
R. Freeman, CMED
C. Bridgeman

It has recently been determined that in some low input voltage configurations, the installation manual does not cover adequately the necessary adjustments to achieve proper anode rotation speed in the 180 Hertz High "Q" mode. Therefore, we are enclosing herein (and also with each new 3791 shipped after February 1, 1973) a voltage comparison chart for most x-ray tubes presently used in the field. This chart supersedes Page 23 in manual T55-651 and should be used during replacement calibration procedures of any high speed x-ray tube where a 3791 is employed. It should also be used as a basis for rechecking currently installed High "Q" tubes during routine maintenance or service calls.

The installation manual T55-651 for the 3791 is under revision right now and will shortly be issued with the correct set up voltages. In the meantime, please inform all servicemen likely to come in contact with a High "Q" tube and 3791 combination to use the enclosed chart and to not hesitate to call Technical Support if they have any questions.

In a short time each district service manager will automatically receive a Frahm Tachometer with which to check rotation speed of any questionable tube. It is not necessary nor recommended that you wait for the tachometer before proceeding with the recommendations made herein. It is recommended, however, that a scope be used for start voltage measurements for high "Q" tubes due to the short signal duration on "Q" tubes and that the start to run time not be increased to allow the use of a voltmeter due to the additional heat introduced into the housing by this method.

Jim

/sr
Encls.

PRELIMINARY INSTRUCTIONS AND CALIBRATION

1. Connect the blue lead on secondary of T5 to Terminal 7, regardless of input line voltage. All start voltages stated in the attached chart are based on this preliminary step.

2. Minimum speeds allowable, as checked with a Frahm Tachometer, are:

   60 = 3000 RPM
   180 = 9000 RPM

3. With the various classification groups stated in the chart, always check stator resistance to be sure which type is in your housing.

4. For Machlett equivalents, use appropriate class grouping according to tube rating charts.

CALIBRATION PROCEDURE

A. Test equipment required:

   1. AC Voltmeter (iron vane type preferred).

   2. Dual trace storage scope with an "add" function and ability to invert one channel. (For calibration of "Q" stators only.)

   3. X10 scope probes - 2 required.

NOTE

Voltages provided in chart are true "RMS" as read on an iron vane voltmeter or an average voltage reading as provided on a VOM or VTVM. Refer to correct column when checking stator voltages.

B. Load-On Calibration

NOTE

The following instructions apply to the "Load-On Final Calibration" portion of the 3791 manual T55-651, beginning on page 14. The following instructions are general guidelines and are not intended to replace any portion of the manual. Whenever the calibration procedure refers to a stator adjustment, refer to this guideline and attached chart for correct voltages.

1. 60 HZ Calibration should be performed with a 0-300 VAC iron vane voltmeter (or VOM/VTVM) connected between terminals TB1-7 and TB1-9 in the rotor drive unit.

   a. Start voltage - If the incoming line voltage is between

(Continued)

200 VAC and 240 VAC, set R5 to maximum (fully clockwise). The minimum voltage that can be applied is 200 VAC. The maximum voltage is 240 VAC. If the incoming line is above 240 VAC, set R5 for a start voltage of 240 VAC.

Above also applies to R1 for "Q" stator 60 HZ start.

NOTE

The start to run time for 60HZ start may be extended to allow a satisfactory reading on the meter. However, do not start the rotor more than once every 2 minutes during calibration in order to allow sufficient cooling time for the stator.

b. Run voltage - Adjust run voltage as outlined in manual, however, refer to the appropriate column for correct run voltage values.

2. 180 HZ Calibration may be performed with an iron vane voltmeter if start time is sufficient to allow an accurate reading. If the start time is not sufficient, do not increase start to run time. The following scope method should be used in cases where time is not sufficient and for all "Q" stator housings.

Scope Set-Up Procedure:

1. Horizontal Deflection - 2MS/div.
2. Vertical Deflection - 10V/div.
3. Mode Selector - "Add" function
4. Vertical Selector - AC voltage
5. Invert one channel
6. Adjust baseline to center reference of scope graticule.
7. Trigger Selection - Line lock.
8. Connect one X10 probe to TB1-7
9. Connect the other X10 probe to TB1-9
10. Connect scope ground to starter ground.

Refer to chart for correct start and run voltages. The following typical scope waveforms indicate expected voltages.

X-RAY TUBES: CATALOG NO. AND TARGET SIZE	STATOR RES. W/B	STATOR RES. W/G	HERTZ	START VOLTAGE SCOPE METHOD SEE TYPICAL PHOTO	START VOLTAGE "TRUE" RMS (Moving Iron Vane Meter)	START VOLTAGE VOM OR VTM	RUN VOLTAGE SCOPE METHOD SEE TYPICAL PHOTO	RUN VOLTAGE "TRUE" RMS (Moving Iron Vane Meter)	RUN VOLTAGE VOM OR VTVM	MOTOR START TIME	BRAKE TIME	180 HZ INVERTER DRIVE P.C. BOARD JUMPERS	VOLTAGE ADJUSTMENT POTS (J3) START	VOLTAGE ADJUSTMENT POTS (J3) RUN	MOTOR START TIME DELAY ADJUSTMENT POTS	CLASS
DU-140 3"	18Ω 18Ω	42Ω 42Ω	60 180	- 240	(See Note 2) 240	(See Note 2) 240	- 120	70 120	50 120	.5 2.0	- 2.0 (See Note 1)	U.T. 9-12 O.T. 8-11 Aux. 7-10	R5 R7	R6 R8	R74 J1 R72 J1	A
PX-35 3"	16Ω 16Ω	30Ω 30Ω	60 180	- 240	(See Note 2) 240	(See Note 2) 240	- 120	70 120	50 120	.5 2.0	- 2.0 (See Note 1)	U.T. 9-12 O.T. 8-11 Aux. 7-10	R5 R7	R6 R8	R74 J1 R72 J1	B
DU-200 4"	18Ω 18Ω	42Ω 42Ω	60 180	- 260	(See Note 2) 260	(See Note 2) 260	- 120	70 120	50 120	2.0 5.0	- 4.0	- -	R5 R7	R6 R8	R46 J1 R21 J1	C
PX-200 4"	16Ω 16Ω	30Ω 30Ω	60 180	- 240	(See Note 2) 240	(See Note 2) 240	- 120	70 120	50 120	2.0 5.0	- 4.0	- -	R5 R7	R6 R8	R46 J1 R21 J1	D
DU-300 4"	18Ω 18Ω	42Ω 42Ω	60 180	- 275	(See Note 2) 275	(See Note 2) 275	- 120	70 120	50 120	3.0 5.0	- 4.0	- -	R5 R7	R6 R8	R46 J1 R21 J1	E
PX-300 4"	16Ω 16Ω	30Ω 30Ω	60 180	- 240	(See Note 2) 240	(See Note 2) 240	- 120	70 120	50 120	3.0 5.0	- 4.0	- -	R5 R7	R6 R8	R46 J1 R21 J1	F
DU/PX 200 "Q" 4"	9Ω 9Ω	18Ω 18Ω	60 180	- 360	(See Note 4) 360 (See Note 3)	(See Note 4) 360 (See Note 3)	- 100	65 100	45 100	1.0 1.0	- 2.0	U.T. 3-6 O.T. 2-5 Aux. 1-4	R1 R3	R2 R4	R47 J2 R47 J2	G
DU/PX 300 "Q"	5.5Ω 5.5Ω	12Ω 12Ω	60 180	- 360	(See Note 4) 360 (See Note 3)	(See Note 4) 360 (See Note 3)	- 100	65 100	45 100	1.0 1.0	- 2.0	U.T. 3-6 O.T. 2-5 Aux. 1-4	R1 R3	R2 R4	R47 J2 R47 J2	H
										1.2 (See Note 3)	2.0	U.T. 3-6 O.T. 2-5 Aux. 1-4				

CLASS	TARGET	HOUSING TYPES
A =	3"	DU-140, DU-175 DU-175HS
B =	3"	PX-140, PX-175 PX-17, PX-18, PX-28 PX-34, PX-35 } Plus HS Versions
C =	4"	DU-200 DU-200HS
D =	4"	PX-200 PX-200HS
E =	4"	DU-300 DU-300HS
F =	4"	PX-300 PX-300HS
G =	4"	DU-200-"Q" PX-200-"Q"
H =	4"	DU-300-"Q" PX-300-"Q"

NOTE

1 Minimum Brake Time required.

2 If line voltage is between 200 VAC and 240 VAC set R5 to maximum (Fully CW). If line voltage is in excess of 240 VAC, set R5 to a maximum of 240 VAC (220 VAC on VOM/VTVM).

3 If input supply voltage is 208 VAC or lower, the maximum voltage obtainable at R5, Term. 7, will be 335 V. If, in any case, Term 7 is below 360 V, time must be extended to 1.2 seconds.

4 For "Q" stator, 60 Hz start, set R1 for maximum (fully clockwise) if line voltage is between 200 VAC and 240 VAC. If line voltage is above 240 VAC, set R1 for 240 VAC (220 VAC on VOM/VTVM).

180 HZ NON- "Q" STATOR

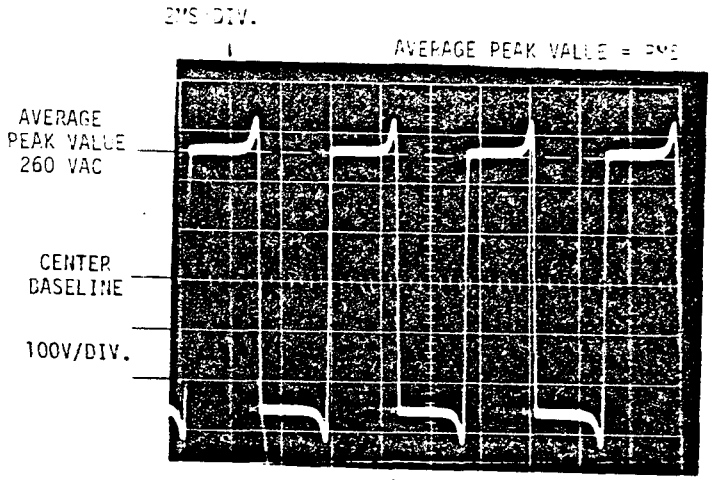

CLASS C

180 HZ **START**, 260VAC

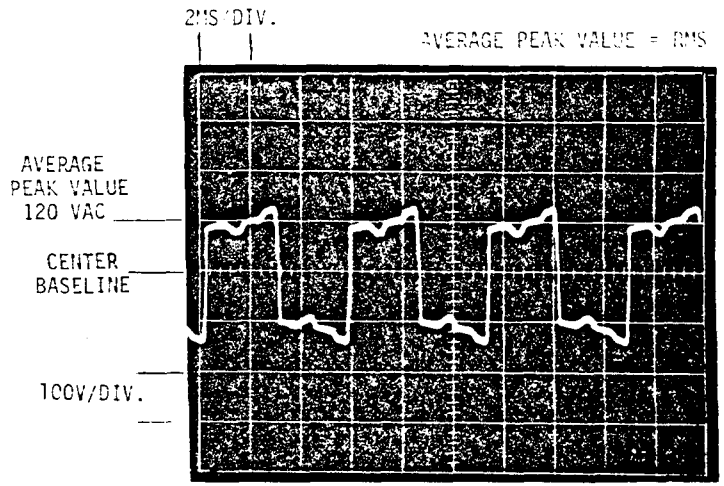

CLASS C,D,E, OR F

180 HZ **RUN**, 120VAC

180 HZ "Q" STATOR

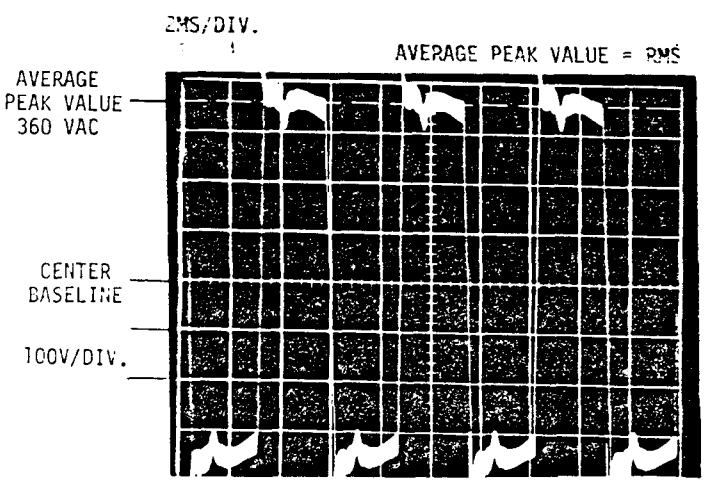

CLASS G OR H

180 HZ **START** "Q" STATOR, 360VAC

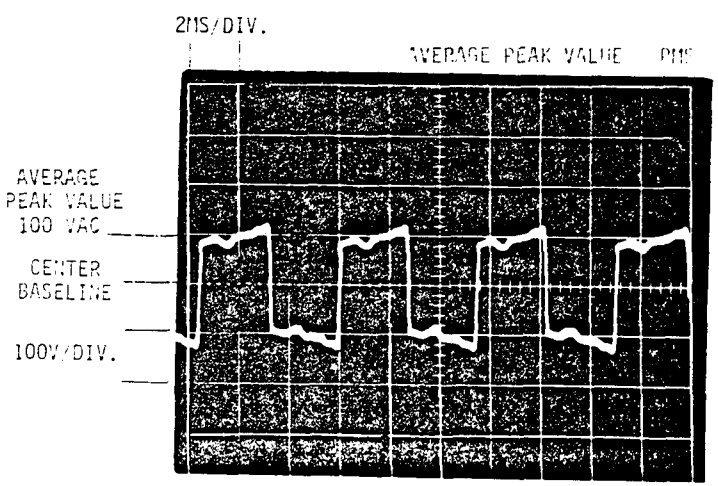

CLASS G OR H

180 HZ **RUN** "Q" STATOR, 100VAC

R12 - -24 VOLT MONITOR

MANUAL TIMING - .144 VDC

P.T. ON - .254 VDC

MA MOTOR RUNNING DRAW .320 V.DC.

R26 +24V. MONITOR

MAN - .232

P.T. ON - .213

MA MOTOR RUNNING .301 VDC

VOLTAGES MEASURED WITH FLUKE METER ACROSS EACH RESISTOR ON 24 VDC PWR SUPPLY.